HTS Pneumatic Top-Guided Single-Seated Control Valve

OVERVIEW

Model HTS Pneumatic Top-guided Single Seated Control Valves are designed for heavy-duty service. The compact valve body, having a S-shape flow passage that features low pressure loss, allows a large flow capacity, rangeability and high accuracy flow characteristics.
The valve plug is highly vibration-resistant as it is held by a top guide section which has a large sliding area. The flow shut-off performance complies with the IEC or JIS Standards. The actuator integrated with simplest mechanisms utilizes a compact yet powerful diaphragm actuator loaded with multiple springs.
The model HTS Valves are widely applicable for reliable control, with high shut-off performance, in high or low temperature, high pressure process lines.

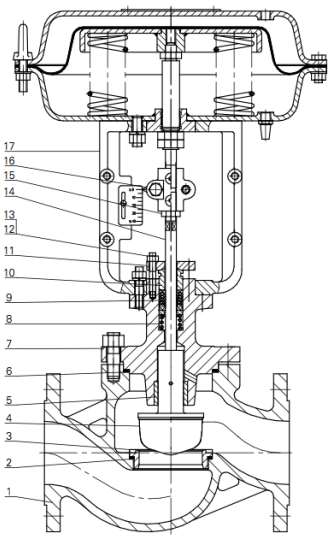

HLS Standard Type
1. Body 2. Seat Gasket 3. Seat 4. Plug 5. Top-Guided
6. Seal Gasket 7. Bonnet 8. Packing Spring 9. Packing
10. Packing Screw 11. Packing Flange 12. Screw 13. Nuts
14. Stem 15. locknut 16. Stem Connector 17. Actuator

SPECIFICATIONS

Body

Type

Straight-through, cast globe valve

Nominal size

3/4”, 1”, 1-1/4”, 1-1/2”, 2”, 2-1/2”, 3”, 4”, 5”, 6”, 8”

Pressure rating

- ANSI Class 125, 150, 300, 600
- JIS 10K, 16K, 20K, 30K, 40K
- PN1.6, 4.0, 6.4, 10.0 Mpa

End connection

- Flanged End: FF, RF, RJ, LG
  According to ANSI B16.5, JIS B2201, JB/T79.1
  PN1.6MPa, JB/T79.2
- Welded End: SW, BW
- Threaded End: Rc

Material

A216 WCB, A216WC6, A352 LCB, A351 CF8, A351 CF8M, A351 CF3M, A351 CF3(see table3-1,3-2)

Bonnet

- Plain bonnet (-17 to 230°C)
- Extension bonnet Type1(-45 to -17°C and 230 to 566°C)
- Extension bonnet Type 2 Cryogenic
  Integral cast type (-100 to -45°C)
  Welded type (-196 to -100°C)
- Bellows type

(See Figure 2-1, 2-2, 2-3, 2-4)

Gland type

Bolted Gland

Packing

V shaped PTFE, PTFE, Flexible graphite

Gasket material

Stainless steel(SUS304, SUS316, SUS316L), copper, aluminum

Trim

Valve plug

Single-seated, Contoured type plug

Actuator

Type

Single-acting diaphragm actuator, Spring type piston actuator, Double acting piton actuator

Diaphragm material

Cloth embedded nylon and ethylene propylene rubber

Spring range

- 20 to 100 kPa(0.2 to 1.0 kgf/cm2)
- 40 to 200 kPa(0.4 to 2.0 kgf/cm2)
- 80 to 240 kPa(0.8 to 2.4 kgf/cm2)

Supply pressure

0.14, 0.16, 0.28, 0.4, 0.5 Mpa

Air connection

Rc1/4 or 1/4NPT internal thread

Ambient temperature

-30 to 70°C

Valve action

- FO: Air to close(Direct action actuator is combined.)
- FC: Air to open(Reverse action actuator is combined.)

Optional accessories

- P/P or I/P Positioner
- Air filter regulator
- Top-mounted or Side-mounted Handwheel
- Limit switch
- Solenoid valve
- Motion transmitter
- Booster relay
- Lock-up valve
- Air lock relay
- Others

Performance

Rated Cv value

Refer to table 1.

Flow characteristics (Refer to table 2)

- Equal percentage
- Linear

Leakage

- Metal Seat
  According to ANSI B16.104 IV, leakage less than 0.01% of maximum valve capacity.
- Soft Seat
  According to ANSI B16.104 VI, leakage less than 0.00001% of maximum valve capacity.

Inherent rangeability

- 50:1
- 75:1

Hysteresis error

- Without positioner: Within 3% F.S.
- With positioner: Within 1% F.S.

Linearity

Without positioner: Within ±5% F.S.
With positioner: Within ±1% F.S.

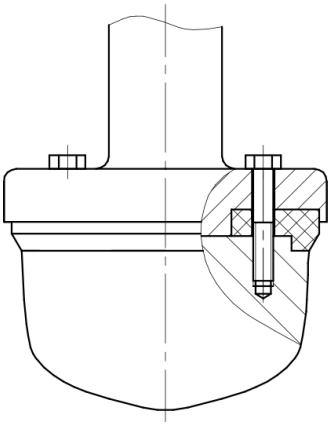

Figure a-a. Plug
(Sealing surface RPTFE)

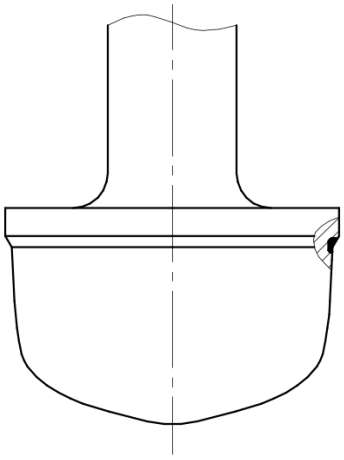

Figure a-b. Plug
(Sealing surface welding Stellite)

Table 1. Rated Kv Value and Travel

Nominal Diameter DN(mm)	Port Size	Rated Kv Value		Travel (mm)
		EQ%	Linear	
20①	20	6.3	6.9	16
25①	20	6.3	6.9	16
	25	10	11	16
32	20	6.3	6.9	16
	25	10	11	16
	32	16	17.6	25
40	25	10	11	16
	32	16	17.6	25
	40	25	27.5	25
50	32	16	17.6	25
	40	25	27.5	25
	50	40	44	25
65	40	25	27.5	25
	50	40	44	25
	65	63	69	40

Nominal Diameter DN(mm)	Port Size	Rated Kv Value		Travel (mm)
		EQ%	Linear	
80	50	40	44	25
	65	63	69	40
	80	100	110	40
100	65	63	69	40
	80	100	110	40
	100	160	176	40
125	80	100	110	40
	100	160	176	40
	125	250	275	60
150	100	160	176	40
	125	250	275	60
	150	400	440	60
200	125	250	275	60
	150	400	440	60
	200	630	690	60

Note①: If for small flow please select Model HLS.

Table 2. Flow characteristics

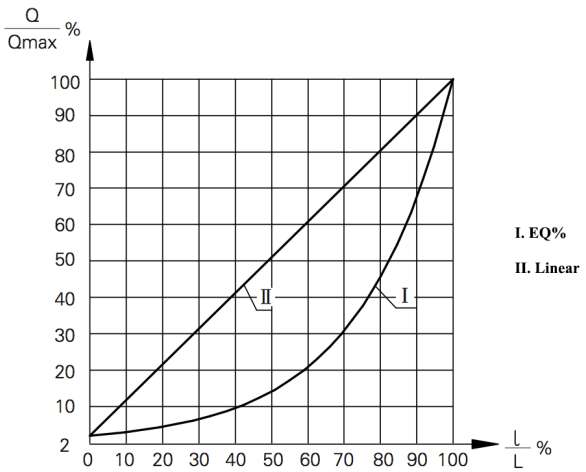

R50 **Unit: %**

Q/Qmax \ l/L \ Characteristics	0	10	20	30	40	50	60	70	80	90	100
EQ%	2	11.8	21.6	31.4	41.2	51	60.8	70.6	80.4	90.2	100
Linear	2	3	4.37	6.5	9.6	14.1	20.9	30.9	45.7	67.6	100

Allowable Differential Pressure For Metal Seat(Diaphragm Actuator)

Air to Close(Direct action) Unit: Mpa

Actuator	Spring Range(Kpa)	Air Supply (Mpa)	Positioner Y/N	Seat Diameter dg (mm)										
				20	25	32	40	50	65	80	100	125	150	200
PZMA-4	20~100	0.14	No	0.95	0.61									
			Yes	2.55	1.63									
	40~200	0.25	Yes	3.34	2.14									
	80~240	0.40	Yes	6.52	4.17									
PZMA-5	20~100	0.14	No			0.49	0.32	0.20						
			Yes			1.31	0.84	0.54						
	40~200	0.25	Yes			1.72	1.10	0.71						
	80~240	0.40	Yes			3.36	2.15	1.37						
PZMA-6	20~100	0.14	No						0.18	0.12	0.08			
			Yes						0.49	0.32	0.21			
	40~200	0.25	Yes						0.65	0.43	0.27			
	80~240	0.40	Yes						1.26	0.83	0.53			
PZMA-7	20~100	0.14	No									0.08	0.06	0.03
			Yes									0.23	0.16	0.09
	40~200	0.25	Yes									0.30	0.21	0.12
	80~240	0.40	Yes									0.58	0.40	0.22

Air to Open(Reverse action) Unit: Mpa

Actuator	Spring Range(Kpa)	Air Supply (Mpa)	Positioner Y/N	Seat Diameter dg (mm)										
				20	25	32	40	50	65	80	100	125	150	200
PZMB-4	20~100	0.14	Yes/No	0.95	0.61									
	40~200	0.25	Yes	2.55	1.63									
	80~240	0.40	Yes	5.73	3.67									
PZMB-5	20~100	0.14	Yes/No			0.49	0.32	0.20						
	40~200	0.25	Yes			1.31	0.84	0.54						
	80~240	0.40	Yes			2.95	1.89	1.21						
PZMB-6	20~100	0.14	Yes/No						0.18	0.12	0.08			
	40~200	0.25	Yes						0.49	0.32	0.21			
	80~240	0.40	Yes						1.11	0.73	0.47			
PZMB-7	20~100	0.14	Yes/No									0.09	0.06	0.03
	40~200	0.25	Yes									0.23	0.16	0.09
	80~240	0.40	Yes									0.52	0.36	0.20

Allowable Differential Pressure For Soft Seat (Diaphragm Actuator)

Air to Close(Direct action) Unit: Mpa

Actuator	Spring Range(Kpa)	Air Supply (Mpa)	Positioner Y/N	Seat Diameter dg (mm)										
				20	25	32	40	50	65	80	100	125	150	200
PZMA-4	20~100	0.14	No	1.20	0.76									
			Yes	2.78	1.78									
	40~200	0.25	Yes	3.00	2.29									
	80~240	0.40	Yes	3.00	3.00									
PZMA-5	20~100	0.14	No			0.62	0.39	0.25						
			Yes			1.44	0.92	0.59						
	40~200	0.25	Yes			1.85	1.18	0.76						
	80~240	0.40	Yes			3.00	2.23	1.42						
PZMA-6	20~100	0.14	No						0.23	0.15	0.10			
			Yes						0.54	0.36	0.23			
	40~200	0.25	Yes						0.69	0.46	0.29			
	80~240	0.40	Yes						1.30	0.86	0.55			
PZMA-7	20~100	0.14	No									0.11	0.08	0.04
			Yes									0.25	0.17	0.10
	40~200	0.25	Yes									0.32	0.22	0.13
	80~240	0.40	Yes									0.60	0.42	0.23

Air to Open(Reverse action) Unit: Mpa

Actuator	Spring Range(Kpa)	Air Supply (Mpa)	Positioner Y/N	Seat Diameter dg (mm)										
				20	25	32	40	50	65	80	100	125	150	200
PZMB-4	20~100	0.14	Yes/No	1.19	0.76									
	40~200	0.25	Yes	2.78	1.78									
	80~240	0.40	Yes	3.00	3.00									
PZMB-5	20~100	0.14	Yes/No			0.62	0.39	0.25						
	40~200	0.25	Yes			1.44	0.92	0.59						
	80~240	0.40	Yes			3.00	1.97	1.26						
PZMB-6	20~100	0.14	Yes/No						0.23	0.15	0.10			
	40~200	0.25	Yes						0.54	0.36	0.23			
	80~240	0.40	Yes						1.15	0.76	0.49			
PZMB-7	20~100	0.14	Yes/No									0.11	0.07	0.04
	40~200	0.25	Yes									0.25	0.17	0.10
	80~240	0.40	Yes									0.54	0.37	0.21

Allowable Differential Pressure (Piston Actuator)

Unit: Mpa

Actuator Size	Spring Range (Kpa)	Air Supply (Mpa)	Sealing Type	Seat Diameter dg(mm)					
				65	80	100	125	150	200
150	-	0.4	Metal Seat	1.98	1.31				
			Soft Seat	2.04	1.34				
200	-	0.4	Metal Seat	3.64	2.40	1.53			
			Soft Seat	3.0	2.44	1.56			
250	-	0.4	Metal Seat			2.43	1.53	1.06	0.59
			Soft Seat			2.46	1.55	1.08	0.60
280	-	0.4	Metal Seat				1.94	1.34	0.75
			Soft Seat				1.96	1.36	0.76
200	125~375	0.5	Metal Seat	1.03	0.68				
			Soft Seat	1.09	0.72				
250	125~375	0.5	Metal Seat	1.70	1.12	0.71			
			Soft Seat	1.75	1.16	0.74			
300	125~375	0.5	Metal Seat			1.06	0.65		
			Soft Seat			1.08	0.68		
350	125~375	0.5	Metal Seat				0.91	0.63	0.35
			Soft Seat				0.94	0.65	0.36

Working Temperature Range and Seat Leakage

Table 3-1 Valve Body Material: Carbon Steel

Valve Body Material		WCB, WCC, WC6, WC9, LCB			
Trim	Material	304/316	304/316	304/316	304/316
	Treatment	RPTFE(Figure a-a)	—	ST(Figure a-b)	SS
Seat	Material	304/316	304/316	304/316	304/316
	Treatment	—	—	ST	SS
Allowable Leakage	Class	V/VI	IV/V/VI	IV/V/VI	IV/V/VI
	Standard	GB/T4213, FCI70.2, ANSI B16.104			
Working Temperature(°C)	WCB, WCC	-5 ~ +160°C	-5 ~ +230°C	-5 ~ +425°C	-5 ~ +425°C
	WC6, WC9	-5 ~ +160°C	-5 ~ +230°C	-5 ~ +538°C	-5 ~ +538°C
	LCB	-45 ~ +160°C	-45 ~ +230°C	-45 ~ +350°C	-45 ~ +350°C

Table 3-2 Valve Body Material: Stainless Steel

Valve Body Material		CF3, CF8, CF3M, CF8M			
Trim	Material	304/316	304/316	304/316	304/316
	Treatment	RPTFE(Figure a-a)	—	ST(Figure a-b)	SS
Seat	Material	304/316	304/316	304/316	304/316
	Treatment	—	—	ST	SS
Allowable Leakage	Class	V/VI	IV/V/VI	IV/V/VI	IV/V/VI
	Standard	GB/T4213, FCI70.2, ANSI B16.104			
Working Temperature(°C)		-45~+160°C	-196 ~ +538°C	-196 ~ +538°C	-196 ~ +538°C

Bonnet Type

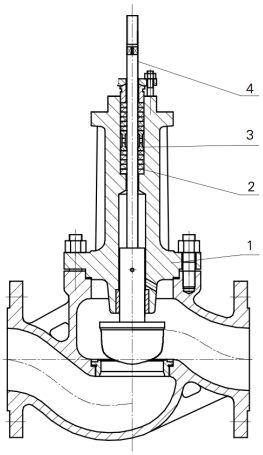

Figure 2-1 Extension Bonnet 1
1. Extension Bonnet 2. Packing 3. Bushing 4. Stem

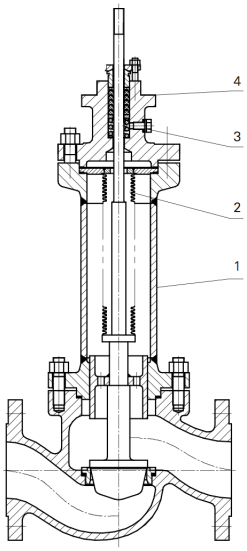

Figure 2-2 Bellows Seal Bonnet
1. Lower Bonnet 2. Bellows 3. Inspection Hole 4. Upper Bonnet

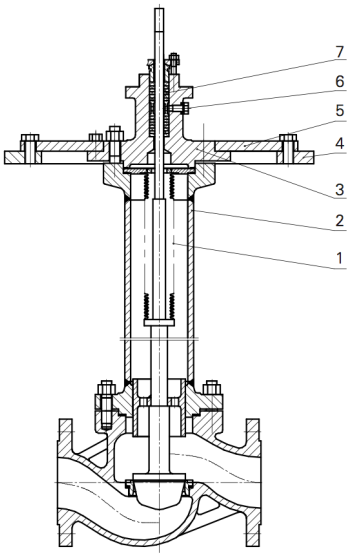

Figure 2-3 Extension Bonnet 2
1. Bellows 2. Lower Bonnet 3. Upper Bonnet 4. Welding Flange 5. Connect Flange 6. Inspection Hole 7. Packing

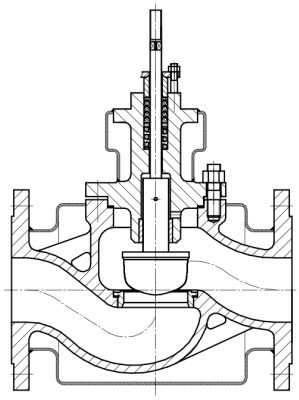

Figure 2-4 Steam Jacket

Figure 1. Valve Trim Material · Treatment

Figure1-1 Metal Seated

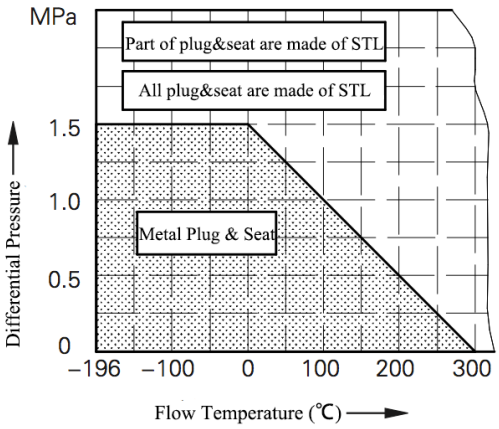

Figure 1-2 Soft Seated(RPTFE)

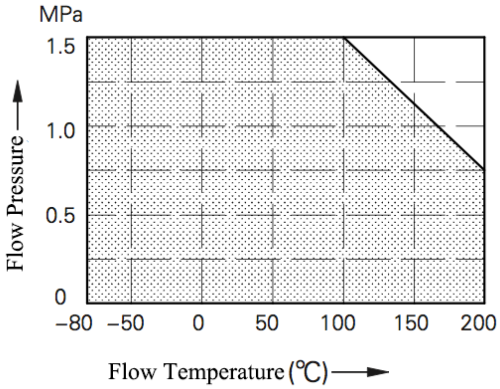

Figure 2. Working Temperature of Packing Material · Pressure Ranges

Figure 2-1 V-Type RPTFE

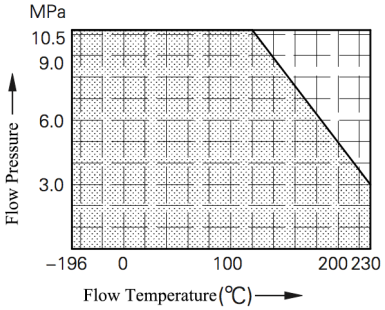

Figure 2-2 PTFE+Carbon Fiber/PTFE+Asbestos

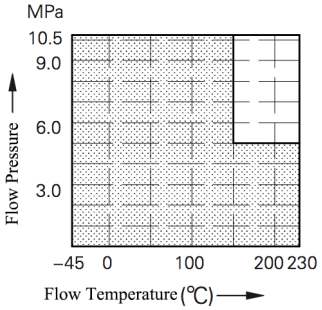

Figure 2-3 Flexible Graphite

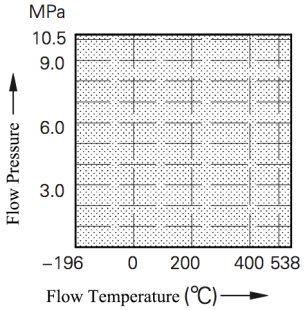

DN20 ~ DN50 External Dimensions for Standard, Bellows and Extension

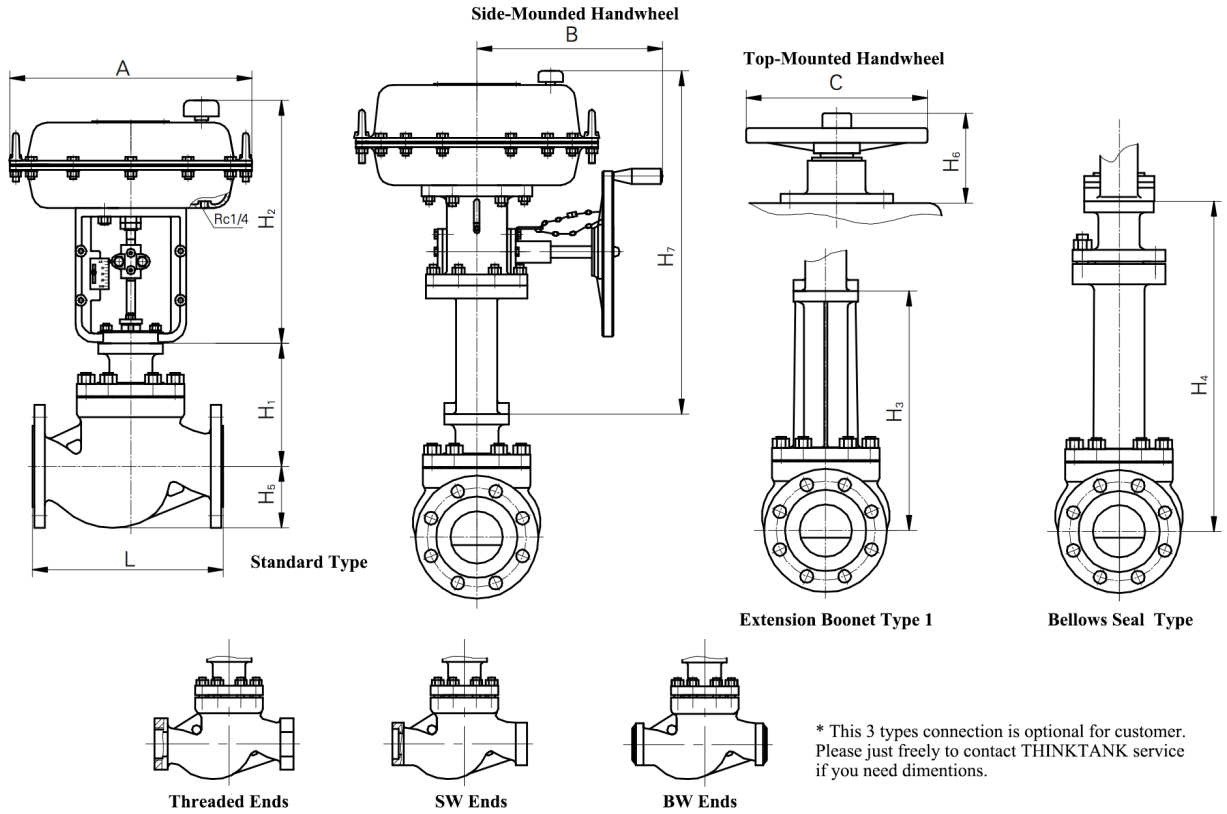

* This 3 types connection is optional for customer. Please just freely to contact THINKTANK service if you need dimentions.

Unit: mm

Nominal Diameter DN(mm)	L			H1	H3	H4	H5	Actuator					
	PN16/ 25/40, 150LB	PN64, 300LB	PN100, 600LB					A	C	H2	H6	H7	B
20(3/4”)	184	194	206	140	255	338	48	282	220	258	180	305	260
25(1”)	184	197	210	140	255	338	54	282	220	258	180	305	260
32(1-1/4”)	222	235	251	160	320	405	60	282	220	258	180	305	260
								308	220	280	180	305	260
40(1-1/2”)	222	235	251	160	320	405	68	282	220	258	180	305	260
								308	220	280	180	305	260
50(2”)	254	267	286	180	320	405	80	308	220	280	180	305	260

DN65 ~ DN200 External Dimensions for Standard, Bellows and Extension

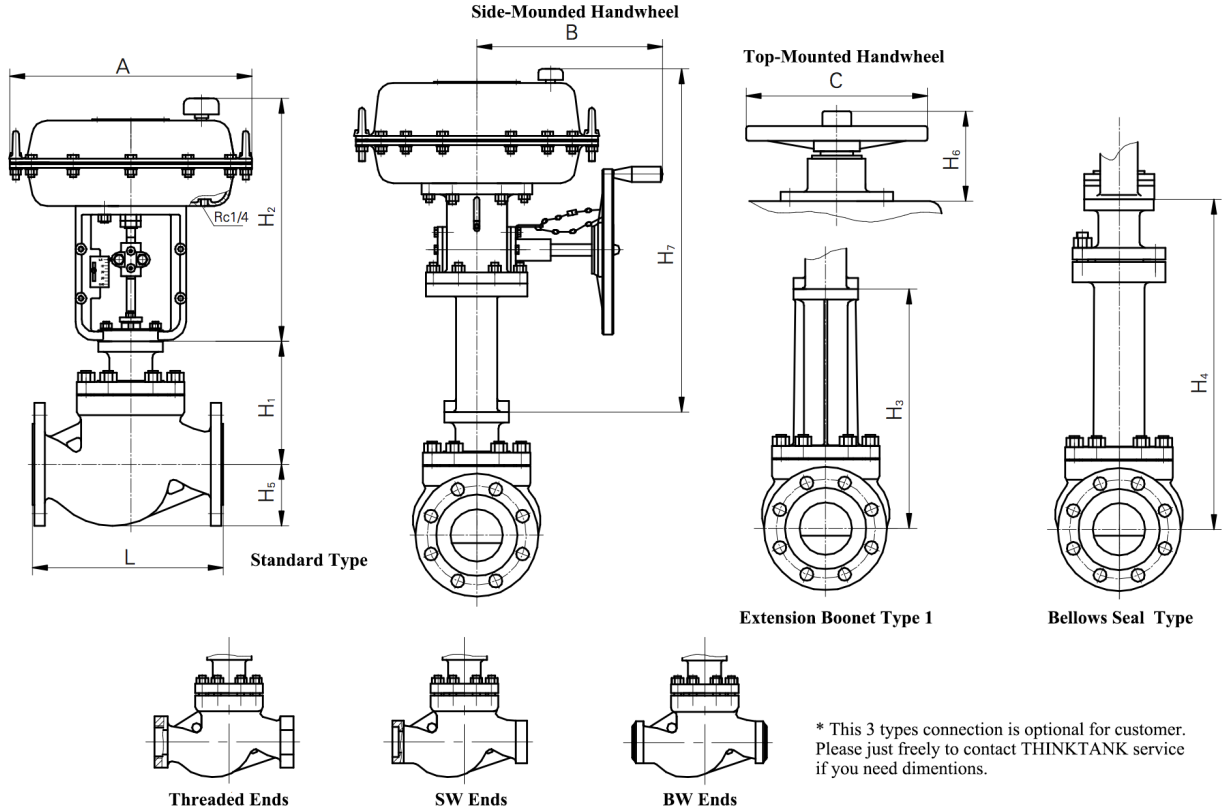

* This 3 types connection is optional for customer. Please just freely to contact THINKTANK service if you need dimentions.

Unit: mm

Nominal Diameter DN(mm)	L			H1	H3	H4	H5	Actuator					
	PN16/ 25/40, 150LB	PN64, 300LB	PN100, 600LB					A	C	H2	H6	H7	B
65(2-1/2”)	276	292	311	210	365	630	90	308	220	280	180	305	260
								394	270	360	236	580	305
80(3”)	298	317	337	210	365	630	105	308	220	280	180	305	260
								394	270	360	236	580	305
100(4”)	352	368	394	220	375	635	115	394	270	360	236	580	305
125(5”)	400	500	500	290	485	698	130	394	270	360	236	580	305
								498	320	435	310	675	330
150(6”)	451	473	508	340	530	705	155	394	270	360	236	580	305
								498	320	435	310	675	330
200(8”)	543	568	610	370	555	730	195	498	320	435	310	675	330

External Dimensions for Extension Type 2

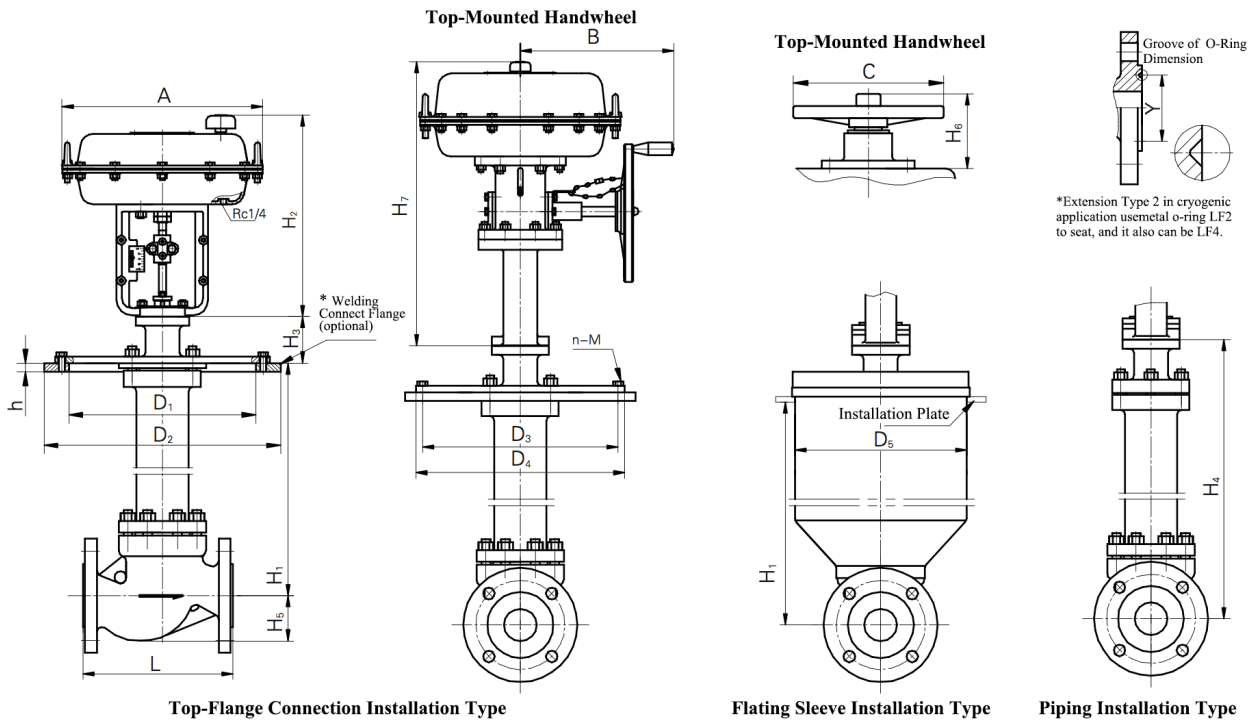

Unit: mm

Nominal Diameter DN(mm)	L			D1	D2	D3	D4	D5	Y	H1	H3	H4	H5	Actuator					
	PN16/25/40, 150LB	PN64,30 0LB	PN100, 600LB											A	C	H2	H6	H7	B
20(3/4”)	184	194	206	230	310	260	290	285	45	700	88	588	42	282	220	258	180	400	260
25(1”)	184	197	210	230	310	260	290	285	45	700	88	588	48	282	220	258	180	400	260
32(1-1/4”)	222	235	251	250	335	285	315	285	60	700	88	588	56	282	220	258	180	400	260
														308	220	280	180	400	260
40(1-1/2”)	222	235	251	270	355	305	335	285	65	700	88	588	65	282	220	258	180	400	260
														308	220	280	180	400	260
50(2”)	254	267	286	305	390	340	370	285	75	700	88	588	76	308	220	280	180	400	260
65(2-1/2”)	276	292	311	430	520	460	490	470	90	700	95	695	90	308	220	280	180	400	260
														394	270	280	236	580	305
80(3”)	298	317	337	490	585	525	490	470	104	700	95	695	100	308	220	280	180	305	260
														394	270	360	236	580	305
100(4”)	352	368	394	556	600	590	555	470	135	700	95	695	122	394	270	360	236	580	305
125(5”)	400	500	500	665	770	700	630	-	165	800	110	810	133	394	270	360	236	580	305
														498	320	435	310	675	330
150(6”)	451	473	508	665	770	700	740	-	195	800	110	810	160	394	270	360	236	580	305
														498	320	435	310	675	330
200(8”)	543	568	610	765	890	805	845	-	245	800	110	810	197	498	320	435	310	675	330

External Dimensions for Double Acting Piston Type Actuator

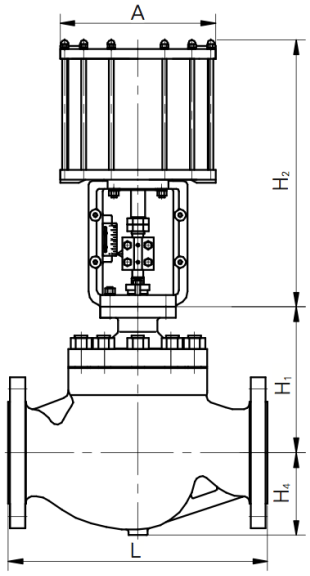

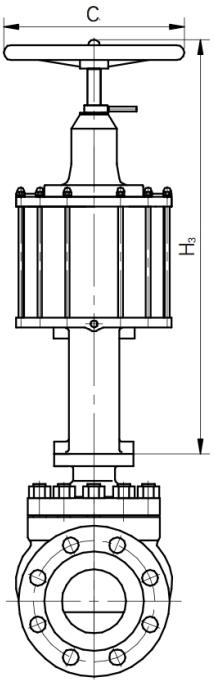

Unit: mm

Nominal Diameter DN(mm)	L			H1	H4	Actuator			
	PN16/25/40, 150LB	PN64, 300LB	PN100, 600LB			A	C	H2	H3
65(2-1/2”)	276	292	311	210	90	210	270	480	780
						280	270	490	790
80(3”)	298	317	337	210	105	210	270	480	780
						280	270	490	790
100(4”)	352	368	394	220	115	280	270	490	790
						325	320	500	800
125(5”)	400	500	500	290	130	325	320	590	950
						354	320	628	988
150(6”)	451	473	508	340	155	325	320	590	950
						354	320	628	988
200(8”)	543	568	610	370	195	325	320	590	950
						354	320	628	988

External Dimensions for Single Acting Piston Type Actuator

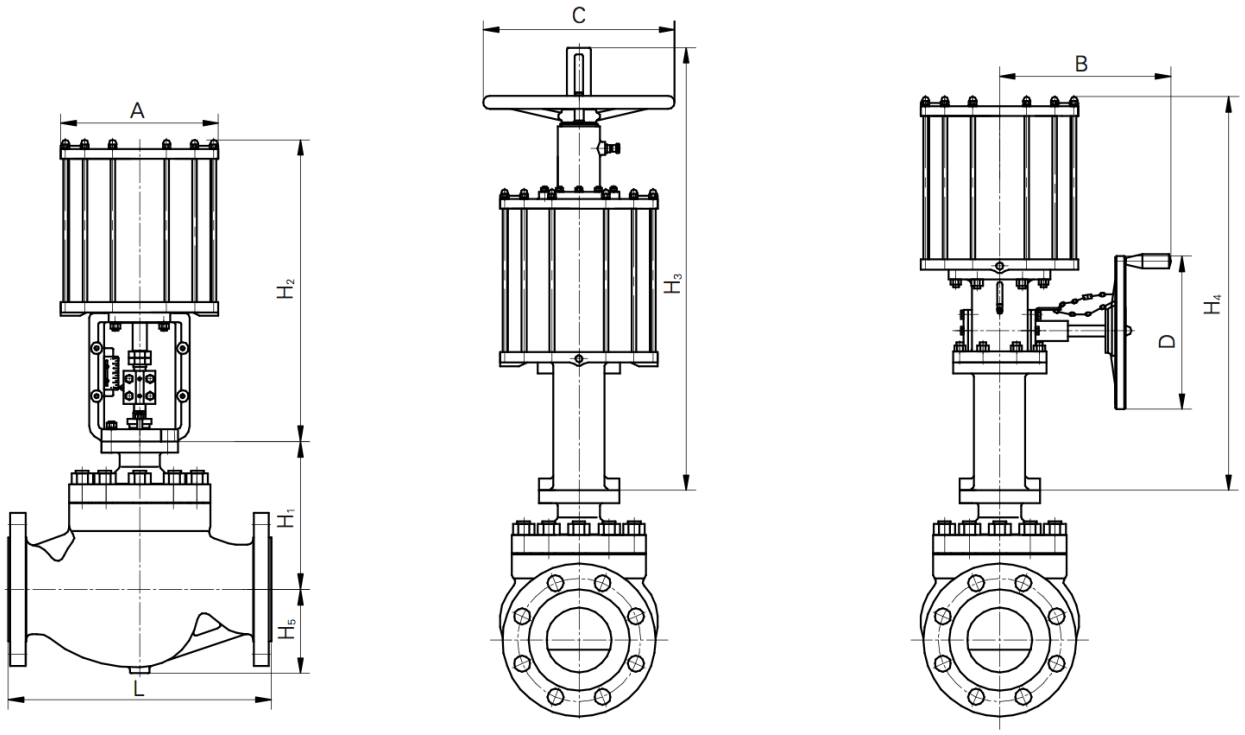

Unit: mm

Nominal Diameter DN(mm)	L			H1	H4	Actuator						
	PN16/25/40, 150LB	PN64, 300LB	PN100, 600LB			A	B	C	D	H2	H3	H4
65(2-1/2”)	276	292	311	210	90	280	250	270	270	535	772	700
						325	250	270	270	565	802	730
80(3”)	298	317	337	210	105	280	250	270	270	535	772	700
						325	250	270	270	565	802	730
100(4”)	352	368	394	220	115	325	329	270	270	565	802	730
						385	329	320	270	570	807	735
125(5”)	400	500	500	290	130	385	329	320	270	635	870	835
						430	349	500	270	695	1045	894
150(6”)	451	473	508	340	155	430	349	500	270	695	1045	894
200(8”)	543	568	610	370	195	430	349	500	270	695	1045	894

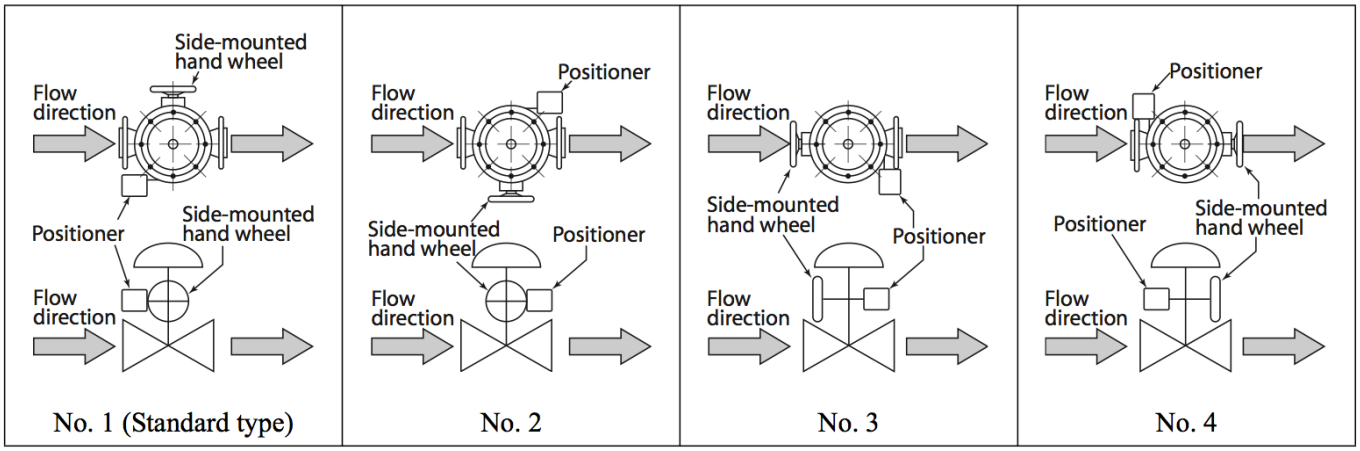

Actuator orientation

Note) Indicate by position number when installation other than the standard type is required.

Ordering Information

When ordering, please specify;

1) Model Number: HTS
2) Nominal size × Cv required
3) Type and rating of end connections
4) Body and trim material, necessity of hardening
5) Type of bonnet
6) Valve and plug characteristics
7) Type of actuator, necessity of hand wheel, and air to diaphragm
8) Valve action (direct or reverse)
9) Accessories (pressure regulator and etc.)
10) Special requirement of degreasing, copper free and etc.
11) Name of flow medium
12) Normal flow and maximum required flow
13) Pressure of flow medium, upstream and downstream pressure at maximum and minimum, required flow
14) Temperature and specific gravity of flow medium
15) Viscosity of flow medium, inclusive or exclusive of slurry

**Specifications are subject to change without notice.*

THINKTANK®

SHANGHAI THINKTANK PROCESS MANAGEMENT CO., LTD
Headquarters: #233 Renai Rd, Sanchong County, Taibei City, Taiwan.
Factory in China: Rd 1, Hongkuan Industrial Zone, Fuqing City, Fujian Province.
Office: #407 Rongxing Rd, Songjiang District, Shanghai City.
URL: https://www.valve-cn.com/