HMT/HDT Pneumatic Three-Way Control Valve

OVERVIEW

The valve model HMT is a three-way control valve for mixing service.
The actuator employed is of a multi-spring type and has a small-sized, high-output diaphragm motor with an extremely simplified operating mechanism.
It is used for the heat control of heat converters, etc.
The valve model HDT is a three-way control valve for diverting service.
It has a small-sized, high-output diaphragm motor which is suitable for big port and high differential pressure services.

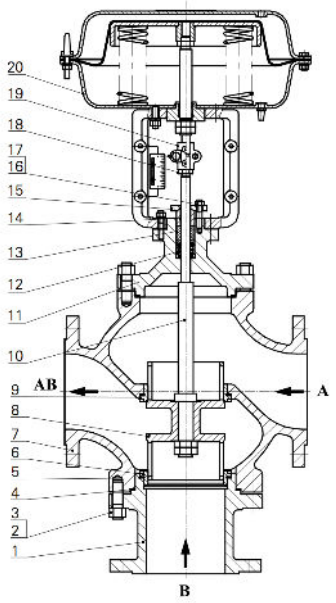

HMT Standard Type

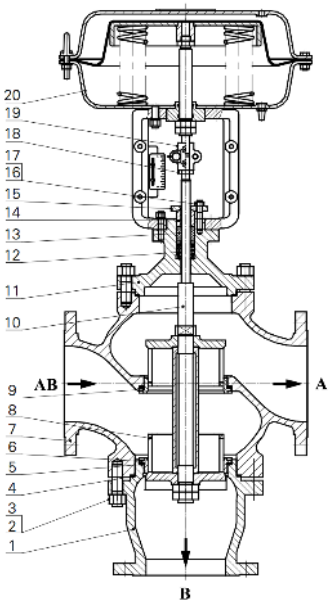

HDT Standard Type

1. Connect Pipe 2. Double-screw Bolt 3. Hexagon Nut 4. Sealing 5. Gasket 6. Lower Bonnet 7. Body 8. Plug 9. Upper Seat 10. Stem 11. Bonnet 12. Packing Spring 13&14. Nuts&Bolts 15. Spring Plate 16&17. Studs&Nuts 18. Locknut 19. Stem Connector 20. Actuator

SPECIFICATIONS

Body

Type

Three-way cast globe valve

Nominal size

3/4", 1", 1-1/4", 1-1/2", 2", 2-1/2", 3", 4", 5", 6", 8", 10", 12", 14"

Pressure rating

- ANSI Class 125, 150, 300, 600
- JIS 10K, 16K, 20K, 30K, 40K
- PN1.6, 4.0, 6.4, 10.0 Mpa

End connection

- Flanged End: FF, RF, RJ, LG
  According to ANSI B16.5, JIS B2201, JB/T79.1
  PN1.6MPa, JB/T79.2
- Welded End: SW, BW

Material

A216 WCB, A216WC6, A352 LCB, A351 CF8, A351 CF8M, A351 CF3M, A351 CF3(see table3-1,3-2)

Bonnet

- Plain bonnet (-17 to 230°C)
- Extension bonnet(-60 to -29 °C or over 230°C)
- Bellows Seal

(see figure 2-1, 2-2)

Gland type

Bolted Gland

Packing

V shaped PTFE, PTFE, Flexible graphite

Gasket material

Stainless steel(SUS304, SUS316, SUS316L), copper, aluminum

Trim

Valve plug

Three-way, V-port with linear characteristics

Actuator

Type

Single-acting diaphragm actuator, Spring type piston actuator, Double acting piton actuator

Diaphragm material

Cloth embedded nylon and ethylene propylene rubber

Spring range

- 20 to 100 kPa(0.2 to 1.0 kgf/cm2)
- 40 to 200 kPa(0.4 to 2.0 kgf/cm2)
- 80 to 240 kPa(0.8 to 2.4 kgf/cm2)

Supply pressure

0.14, 0.25, 0.28, 0.4, 0.5 Mpa

Air connection

Rc1/4 or 1/4NPT internal thread

Ambient temperature

-30 to 70°C

Valve action

- FO: Air to close(Direct action actuator is combined.)
- FC: Air to open(Reverse action actuator is combined.)

Optional accessories

- P/P or I/P Positioner
- Air filter regulator
- Top-mounted or Side-mounted Handwheel
- Limit switch
- Solenoid valve
- Motion transmitter
- Booster relay
- Lock-up valve
- Air lock relay
- Others

Performance

Rated Kv value

Refer to table 1.

Flow characteristics (Refer to table 2)

- Linear

Leakage

- Metal Seat

According to IEC 60534-4:2006 Class IV, leakage less than 0.01% of maximum valve capacity.

Inherent rangeability

- 30:1

Hysteresis error

- Without positioner: Within 3% F.S.
- With positioner: Within 1% F.S.

Linearity

Without positioner: Within ±5% F.S.
With positioner: Within ±1% F.S.

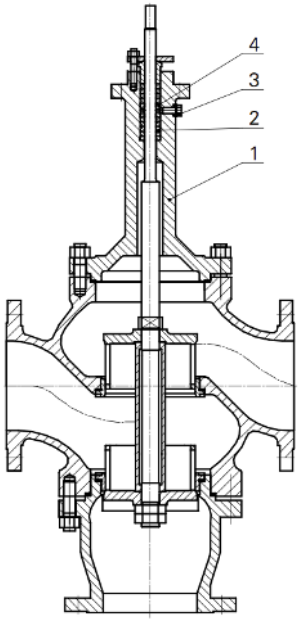

Figure 2-1 Extension Bonnet

Suitable medium temperature range of -60 to -29°C or over 200°C）

1.Extension Bonnet 2. Packing
3. Inspection(custom) 4. Bushing

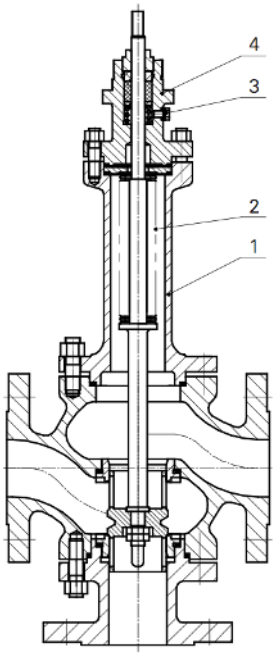

Figure 2-2 Bellows Seal

Bellows seal bonnets are used when no leakage(less than 1x10-6 cc/sec of helium) along the stem can be tolerated. They are often used when the process fluid is toxic, volatile, radioactive, or highly expensive. This special bonnet construction protects both the stem and the valve packing from contact with the process fluid.

1. Lower Bonnet 2. Bellows
3. Inspection(custom) 4. Upper Bonnet

Table 1. Rated Kv Value and Travel

Nominal Diameter DN(mm)	Port Size	Rated Kv Value	Travel(mm)
		Linear	
20	20	5.3	16
25	20	5.3	16
	25	8.5	16
32	20	5.3	16
	25	8.5	16
	32	13	25
40	25	8.5	16
	32	13	25
	40	21	25
50	32	13	25
	40	21	25
	50	34	25
65	40	21	25
	50	34	25
	65	53	40
80	50	34	25
	65	53	40
	80	85	40
100	65	53	40
	80	85	40
	100	135	40

Nominal Diameter DN(mm)	Port Size	Rated Kv Value	Travel(mm)
		Linear	
125	80	85	40
	100	135	40
	125	210	60
150	100	135	40
	125	210	60
	150	340	60
200	125	210	60
	150	340	60
	200	535	60
250	150	340	60
	200	535	60
	250	800	100
300	200	535	60
	250	800	100
	300	1280	100
350	250	800	100
	300	1280	100
	350	1600	100

Table 2. Flow characteristics

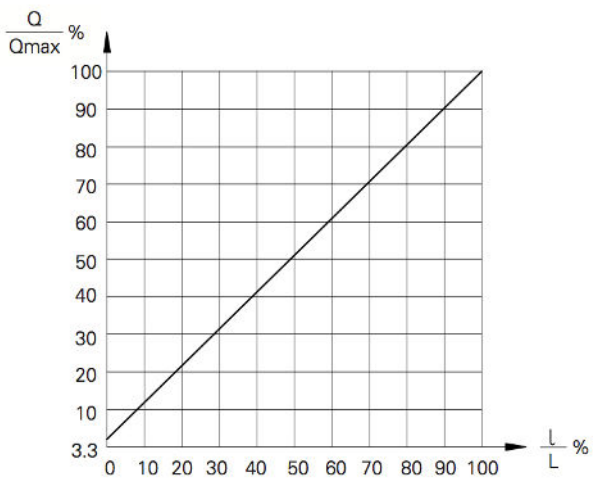

R30 **Unit: %**

Q/Qmax I/L Characteristics	0	10	20	30	40	50	60	70	80	90	100
Linear	3.3	13	22.7	32.3	42	51.7	61.3	71	80.6	90.4	100

Allowable Differential Pressure For Metal Seat(Diaphragm Actuator)

Air to Close(Direct action) Unit: Mpa

Actuator	Spring Range(Kpa)	Air Supply (Mpa)	Positioner Y/N	Seat Diameter dg (mm)													
				20	25	32	40	50	65	80	100	125	150	200	250	300	350
PZMA-4	20~100	0.14	No	0.95	0.61												
			Yes	2.55	1.63												
	40~200	0.25	Yes	3.34	2.14												
	80~240	0.40	Yes	6.52	4.147												
PZMA-5	20~100	0.14	No			0.49	0.32	0.20									
			Yes			1.31	0.84	0.54									
	40~200	0.25	Yes			1.72	1.10	0.71									
	80~240	0.40	Yes			3.36	2.15	1.37									
PZMA-6	20~100	0.14	No						0.18	0.12	0.08						
			Yes						0.49	0.32	0.21						
	40~200	0.25	Yes						0.65	0.43	0.27						
	80~240	0.40	Yes						1.26	0.83	0.53						
PZMA-7	20~100	0.14	No									0.09	0.06	0.03			
			Yes									0.23	0.16	0.09			
	40~200	0.25	Yes									0.30	0.21	0.12			
	80~240	0.40	Yes									0.58	0.40	0.22			
PZMA-8	20~100	0.14	No												0.03	0.02	0.02
			Yes												0.10	0.07	0.05
	40~200	0.25	Yes												0.13	0.09	0.07
	80~240	0.40	Yes												0.24	0.17	0.12

Air to Open(Reverse action) Unit: Mpa

Actuator	Spring Range(Kpa)	Air Supply (Mpa)	Positioner Y/N	Seat Diameter dg (mm)													
				20	25	32	40	50	65	80	100	125	150	200	250	300	350
PZMB-4	20~100	0.14	Yes/No	0.95	0.61												
	40~200	0.25	Yes	0.55	1.63												
	80~240	0.40	Yes	5.73	3.67												
PZMB-5	20~100	0.14	Yes/No			0.49	0.32	0.20									
	40~200	0.25	Yes			1.31	0.84	0.54									
	80~240	0.40	Yes			2.95	1.89	1.21									
PZMB-6	20~100	0.14	Yes/No						0.18	0.12	0.08						
	40~200	0.25	Yes						0.49	0.32	0.21						
	80~240	0.40	Yes						1.11	0.73	0.47						
PZMB-7	20~100	0.14	Yes/No									0.09	0.06	0.03			
	40~200	0.25	Yes									0.23	0.16	0.09			
	80~240	0.40	Yes									0.52	0.36	0.20			
PZMB-8	20~100	0.14	Yes/No												0.03	0.02	0.02
	40~200	0.25	Yes												0.09	0.06	0.05
	80~240	0.40	Yes												0.21	0.14	0.10

Allowable Differential Pressure (Piston Actuator)

Unit: Mpa

Actuator Size	Spring Range (Kpa)	Air Supply (Mpa)	Seat Diameter dg(mm)								
			65	80	100	125	150	200	250	300	350
150	-	0.4	1.98	1.31							
200	-	0.4	3.53	2.33	1.49						
250	-	0.4			2.33	1.49	1.03	0.58			
280	-	0.4				1.87	1.30	0.73			
300	-	0.4						0.84	0.54		
350	-	0.4							0.73	0.51	0.37
200	125~375	0.5	1.05	0.69							
250	125~375	0.5	1.64	1.09	0.69						
300	125~375	0.5			1.00	0.64	0.44				
350	125~375	0.5				0.87	0.61	0.34			
400	125~375	0.5						0.44	0.28	0.20	0.15

Working Temperature Range and Seat Leakage

Table 3-1 Valve Body Material: Carbon Steel

Valve Body Material		WCB, WCC, WC6, WC9, LCB		
Trim	Material	304/316	304/316	304/316
	Treatment	—	ST(Figure 1-1)	SS
Seat	Material	304/316	304/316	304/316
	Treatment	—	ST	SS
Allowable Leakage	Class	IV	IV/V	IV/V
	Standard	GB/T4213, FCI70.2, ANSI B16.104		
Working Temperature(°C)	WCB, WCC	-45~+230°C	-5 ~ +425°C	-5 ~ +425°C
	WC6, WC9	-45~+230°C	-5 ~ +538°C	-5 ~ +538°C
	LCB	-45~+230°C	-45 ~ +350°C	-45 ~ +350°C

Table 3-2 Valve Body Material: Stainless Steel

Valve Body Material		CF3, CF8, CF3M, CF8M		
Trim	Material	304/316	304/316	304/316
	Treatment	—	ST(Figure 1-1)	SS
Seat	Material	304/316	304/316	304/316
	Treatment	—	ST	SS
Allowable Leakage	Class	IV	V/VI	V/VI
	Standard	GB/T4213, FCI70.2, ANSI B16.104		
Working Temperature(°C)		-45~+160°C	-196 ~ +538°C	-196 ~ +538°C

Figure 1. Valve Trim Material · Treatment

Figure1-1 Metal Seated

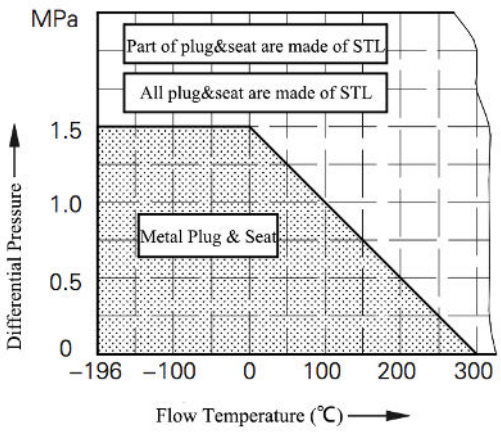

Figure 2. Working Temperature of Packing Material · Pressure Ranges

Figure 2-1 V-Type RPTFE

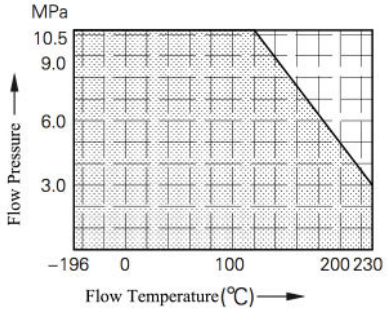

Figure 2-2 PTFE+Carbon Fiber/PTFE+Asbestos

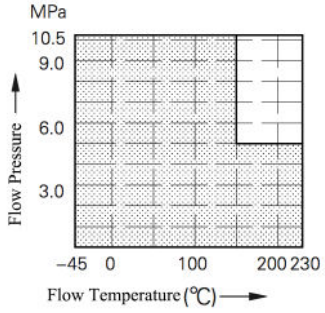

Figure 2-3 Flexible Graphite

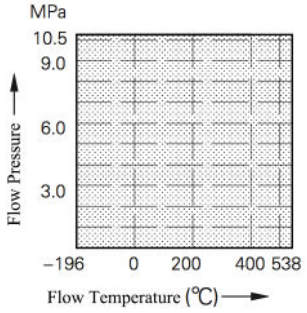

The Principle of Action

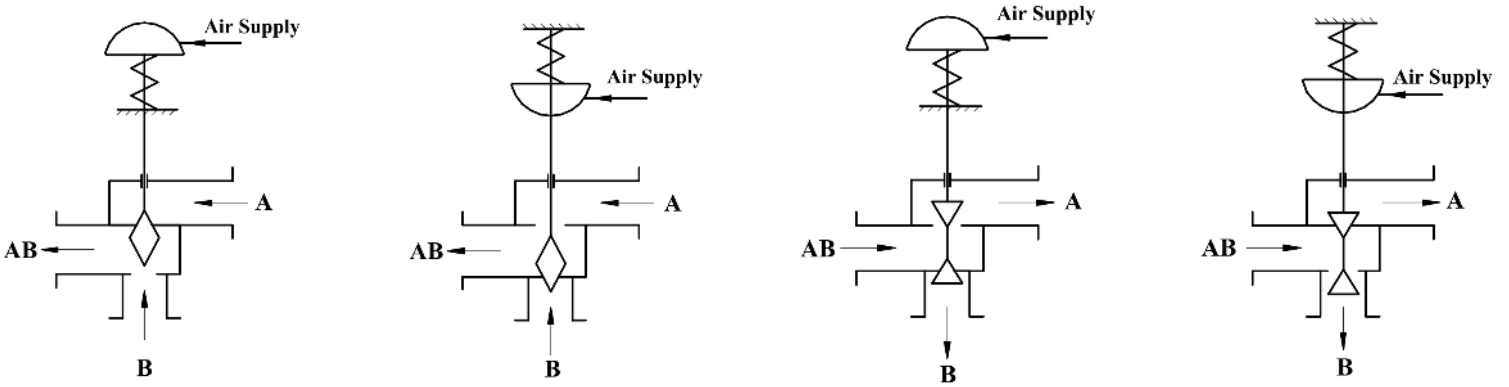

Model HMT
a) Direct Action Mixing Service

Model HMT
b) Reverse Action Mixing Service

Model HDT
c) Direct Action Diverting Service

Model HDT
d) Reverse Action Diverting Service

Description:

The plug structure of Three-way control valve is designed flow to open. If valve plug in the valve seat that is mixing service control valve. There are two input port and one outlet port(see Figure a, b). The valve plug is located on the outside of the valve seat that is diverting service control valve. There is one inlet port and two outlet ports (see Figure c, d). Due to three-way control valve have opening and closing operation at the same time, so three-way control valve don't have air to open or air to close such type.

- *For Direct Action Mixing Service, air failure means vertical pass(B → AB). But for Reverse Action Mixing Service, air failure means flow is horizontal pass (A → AB)*
- *For Direct Action Diverting Service, air failure means horizontal pass (AB → A). But for Reverse Action Diverting Service, air failure means flow is vertical pass(AB → B)*

DN20 ~ DN350 External Dimensions for Standard, Bellows and Extension

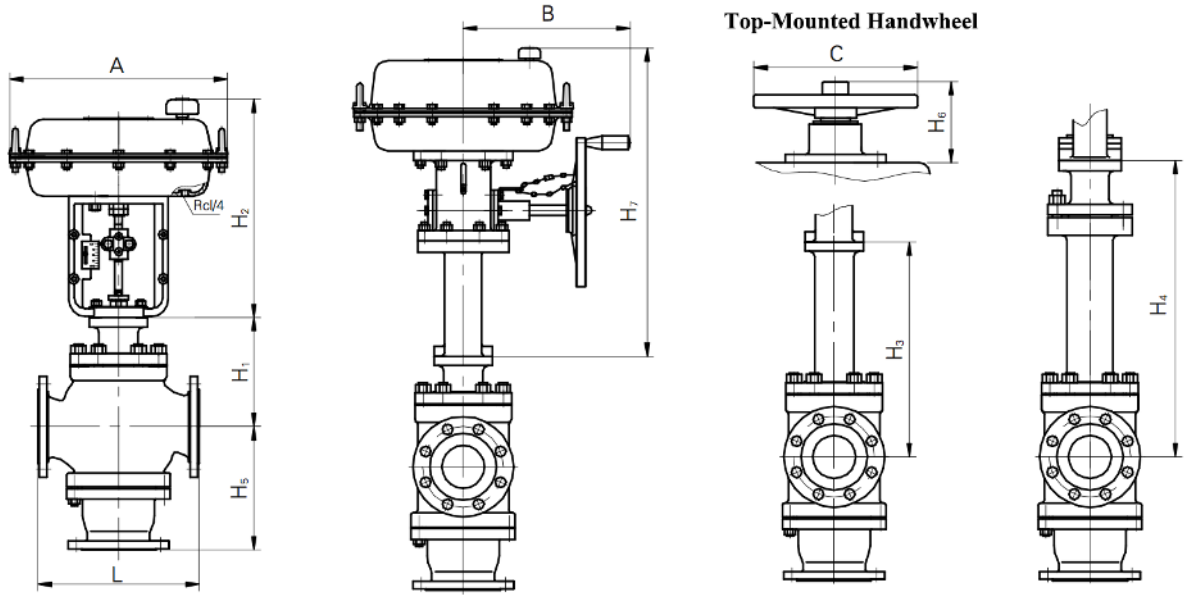

Standard Type Extension Type Bellows Seal Type

Unit: mm

Nominal Diameter DN(mm)	L			H1	H3	H4	H5		Actuator					
	PN16/ 25/40, 150LB	PN64, 300LB	PN100, 600LB				PN16/ 25/40, 150LB	PN64, 300LB	A	B	C	H2	H6	H7
20(3/4”)	184	194	206	121	249	333	123	157	282	260	220	258	180	465
25(1”)	184	197	210	128	249	333	125	160	282	260	220	258	180	465
32(1-1/4”)	222	235	251	140	308	374	132	170	282	260	220	258	180	465
									308	260	220	280	180	465
40(1-1/2”)	222	235	251	147	315	396	140	180	282	260	220	258	180	465
									308	260	220	280	180	465
50(2”)	254	267	286	163	323	405	155	200	308	260	220	280	180	465
65(2-1/2”)	276	292	311	193	353	640	182	230	308	260	220	280	180	465
									394	305	270	360	236	580
80(3”)	298	317	337	198	363	650	225	250	308	260	220	280	180	465
									394	305	270	360	236	580
100(4”)	352	368	394	208	373	660	251	295	394	305	270	360	236	580
125(5”)	400	500	500	259	469	682	318	350	394	305	270	360	236	580
									498	330	270	435	310	675
150(6”)	451	473	508	303	499	710	374	404	394	305	270	360	236	580
									498	330	320	435	310	675
200(8”)	543	568	610	338	529	742	446	515	498	330	320	435	310	675
250(10”)	-①	-	-	444	700	820	552	605	618	374	500	621	394	959
300(12”)	-	-	-	494	716	840	616	636	618	374	500	621	394	959
350(14”)	-	-	-	578	808	930	740	740	618	374	500	621	394	959

Note: ① The distance of two flange or Valve Length could be custom by customer’s requirements.

External Dimensions for Double Acting Piston Type Actuator

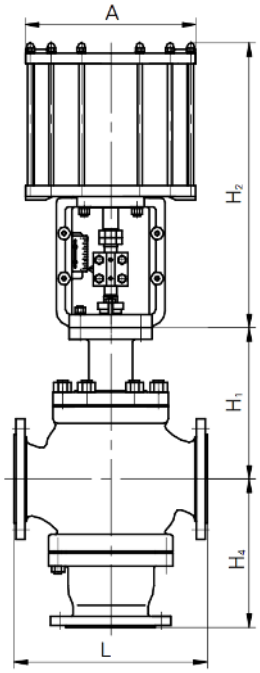

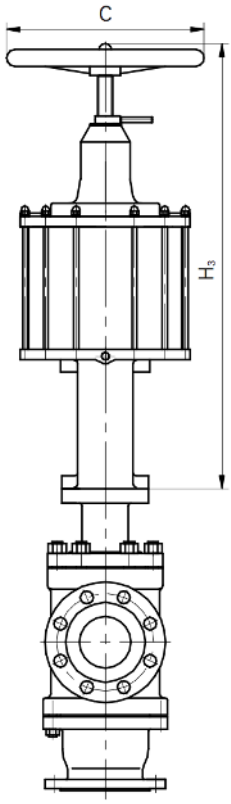

Unit: mm

Nominal Diameter DN(mm)	L			H1	H4		Actuator			
	PN16/25/40, 150LB	PN64, 300LB	PN100, 600LB		PN16/25 /40, 150LB	PN64, 300LB	A	C	H2	H3
65(2-1/2”)	276	292	311	193	182	230	210	270	480	780
							280	270	490	790
80(3”)	298	317	337	198	225	250	210	270	480	780
							280	270	490	790
100(4”)	352	368	394	208	251	295	280	270	490	790
							325	550	510	1014
125(5”)	400	500	500	259	318	350	325	550	510	1064
							354	550	527	1085
150(6”)	451	473	508	303	374	404	325	550	510	1064
							354	550	527	1085
200(8”)	543	568	610	338	446	515	325	550	510	1064
							354	550	527	1085
250(10”)	-①	-	-	444	552	605	385	550	530	1085
300(12”)	-	-	-	494	616	635	412	550	658	1220
350(14”)	-	-	-	578	740	740	412	550	658	1220

Note: ① The distance of two flange or Valve Length could be custom by customer’s requirements.

External Dimensions for Single Acting Piston Type Actuator

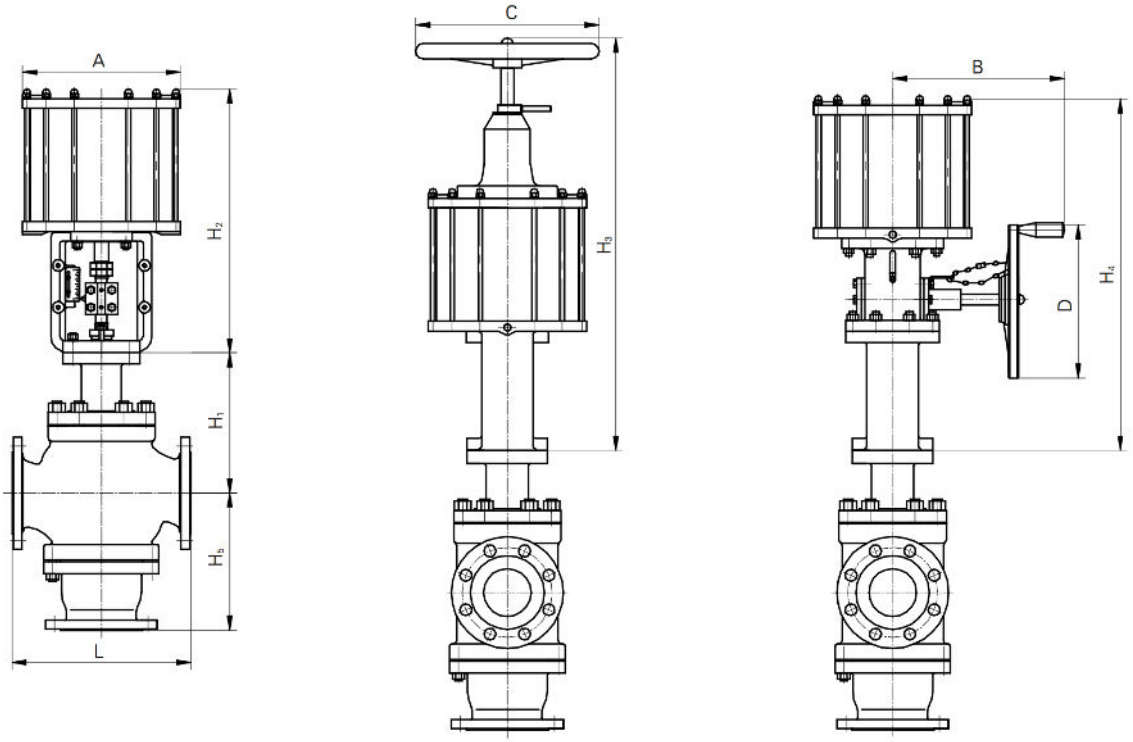

Unit: mm

Nominal Diameter DN(mm)	L			H1	H5		Actuator						
	PN16/25/40, 150LB	PN64, 300LB	PN100, 600LB		PN16/ 25/40, 150LB	PN64, 300LB	A	B	C	D	H2	H3	H4
65(2-1/2”)	276	292	311	193	182	230	280	250	270	270	535	772	700
							325	250	270	270	565	802	730
80(3”)	298	317	337	198	225	250	280	250	270	270	535	772	700
							325	329	270	270	565	802	730
100(4”)	352	368	394	208	251	295	325	329	270	270	565	802	730
							385	329	320	270	570	807	735
125(5”)	400	500	500	259	318	350	385	329	320	270	635	870	835
							430	349	500	270	695	1045	894
150(6”)	451	473	508	303	374	404	430	349	500	270	695	1045	894
200(8”)	543	568	610	338	446	515	430	349	500	270	695	1045	894
250(10”)	-①	-	-	444	552	605	430	349	500	320	695	1045	894
300(12”)	-	-	-	494	616	635	485	374	500	320	775	1169	1083
350(14”)	-	-	-	578	740	740	485	374	500	320	775	1169	1083

Note: ① The distance of two flange or Valve Length could be custom by customer’s requirements.

a. Mixing Service by HMT

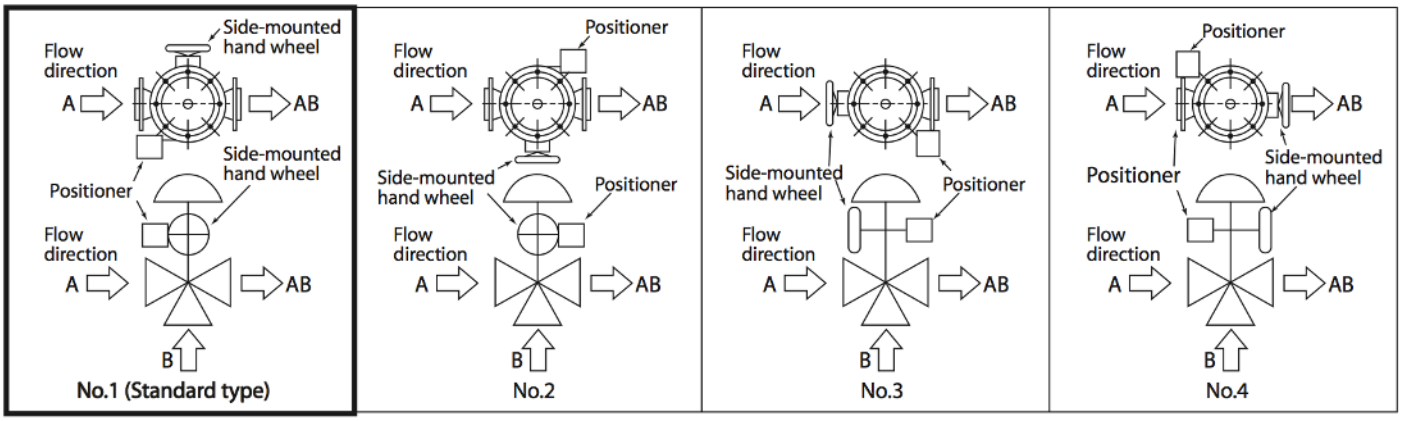

b. Diverting Service by HDT

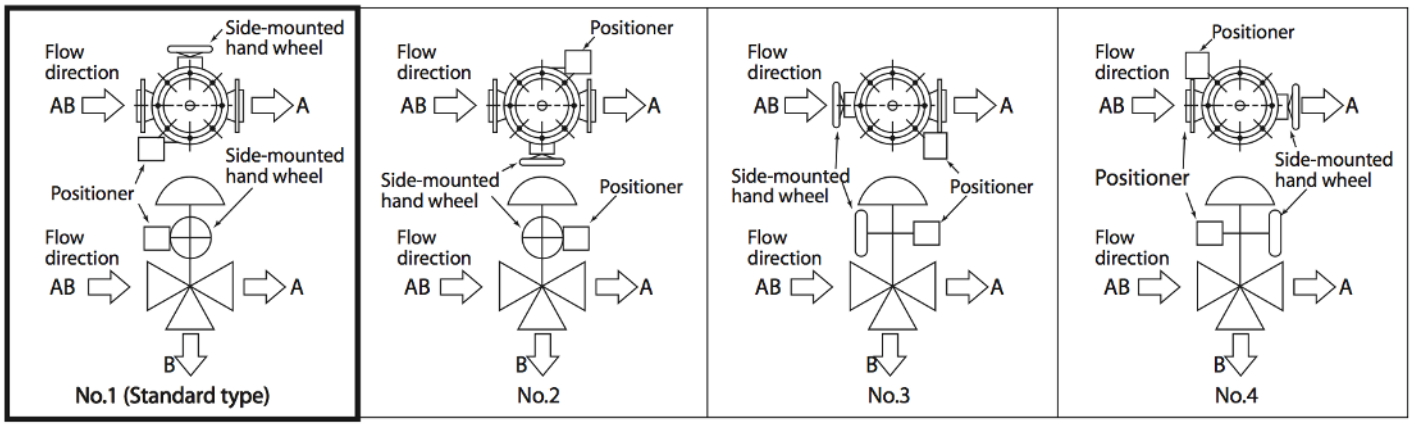

Actuator orientation

Note) Indicate by position number when installation other than the standard type is required.

Ordering Information

When ordering, please specify;

1) Model Number: HMT/HDT
2) Nominal size
3) Type and rating of end connections
4) Body and trim material, necessity of hardening
5) Type of bonnet
6) Valve and plug characteristics
7) Type of actuator, air to diaphragm
8) Valve action (direct or reverse)
9) Accessories (positioner, handwheel, pressure regulator and etc.)
10) Special requirement of degreasing, copper free and etc.
11) Name of flow medium
12) Normal flow and maximum required flow
13) Pressure of flow medium, upstream and downstream pressure at maximum and minimum, required flow
14) Temperature and specific gravity of flow medium
15) Viscosity of flow medium, inclusive or exclusive of slurry

**Specifications are subject to change without notice.*

THINKTANK®

SHANGHAI THINKTANK PROCESS MANAGEMENT CO., LTD
Address: #407 Rongxing Rd, Songjiang District, Shanghai City.
URL: https://www.cncontrolvalve.com/