HLC Pneumatic Small-Port Cage-Guided Type Single-Seated Control Valve

OVERVIEW

Model HLC Pneumatic Small-Port Cage-Guided Type Single-Seated Control Valves are designed for high differential pressure Service where fluid normal differential pressure exceeds 2940 kPa {30 kgf/cm2} or for heavy-duty service where flashing/cavitation may occur. Further, they are ideal for preventing erosion from the valve body, because their guides are sturdy and the valve body is protected by a cage. The com- pact valve body, having an S-shaped flow passage that features low pressure loss, allows a large flow capacity and rangeability.
The valve plugs are available in a wide range of Cv values. The flow shutoff performance complies with simplest mechanisms, utilizes a compact yet powerful diaphragm actuator loaded with multiple springs.
The model HLC Control Valves are widely applicable for reliable control of small flows in high- or low-temperature, high differential pressure process lines.

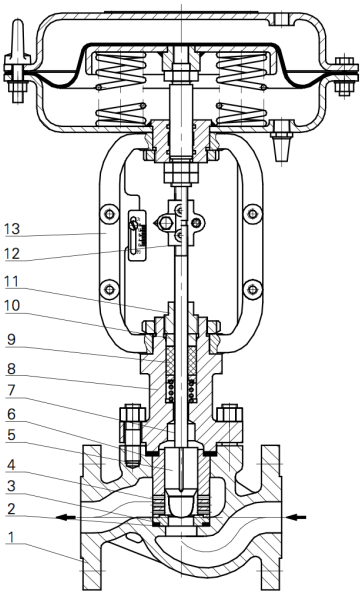

HLC Standard Type
1. Body 2. Seat Gasket 3. Seat 4. Cage 5. Plug
6. Seal Gasket 7. Stem 8. Bonnet 9. Packing 10. Sleeve
11. Packing Flange 12. Stem Connector 13. Yoke

SPECIFICATIONS

Body

Type

Straight-through, cast globe valve

Nominal size

3/4”, 1”, 1-1/4”, 1-1/2”, 2”, 2-1/2”

Pressure rating

- ANSI Class 125, 150, 300, 600
- JIS 10K, 16K, 20K, 30K, 40K
- PN1.6, 4.0, 6.4 Mpa

End connection

- Flanged End: FF, RF, RJ, LG
  According to ANSI B16.5, JIS B2201, JB/T79.1
  PN1.6MPa, JB/T79.2
- Welded End: SW, BW
- Threaded End: Rc

Material

A216 WCB, A216WC6, A352 LCB, A351 CF8, A351 CF8M, A351 CF3M, A351 CF3(see table3-1,3-2)

Bonnet

- Plain bonnet (-17 to 230°C)
- Extension bonnet Type1(-45 to -17°C and 230 to 566°C)
- Extension bonnet Type 2 Cryogenic
  Integral cast type (-100 to -45°C)
  Welded type (-196 to -100°C)
- Bellows type

Gland type

Bolted Gland

Packing

V shaped PTFE, PTFE, Flexible graphite

Gasket material

Stainless steel(SUS304, SUS316, SUS316L), copper, aluminum

Trim

Valve plug

Single-seated, Contoured type plug

Actuator

Type

Single-acting diaphragm actuator

Diaphragm material

Cloth embedded nylon and ethylene propylene rubber

Spring range

- 20 to 100 kPa(0.2 to 1.0 kgf/cm2)
- 40 to 200 kPa(0.4 to 2.0 kgf/cm2)
- 80 to 240 kPa(0.8 to 2.4 kgf/cm2)

Supply pressure

0.14, 0.16, 0.28 Mpa

Air connection

Rc1/4 or 1/4NPT internal thread

Ambient temperature

-30 to 70°C

Valve action

- FO: Air to close(Direct action actuator is combined.)
- FC: Air to open(Reverse action actuator is combined.)

Optional accessories

- P/P or I/P Positioner
- Air filter regulator
- Top-mounted or Side-mounted Handwheel
- Limit switch
- Solenoid valve
- Motion transmitter
- Booster relay
- Lock-up valve
- Air lock relay
- Others

Performance

Rated Cv value

Refer to table 1.

Flow characteristics (Refer to table 2)

- Equal percentage
- Linear

Leakage

- Metal Seat
  According to ANSI B16.104 IV, leakage less than 0.01% of maximum valve capacity.
- Soft Seat
  According to ANSI B16.104 VI, leakage less than 0.001% of maximum valve capacity.

Inherent rangeability

50:1(Cv≥1.0), 30:1(Cv=0.63) or 20:1(Cv≤0.4)

Hysteresis error

- Without positioner: Within 3% F.S.
- With positioner: Within 1% F.S.

Linearity

Without positioner: Within ±5% F.S.
With positioner: Within ±1% F.S.

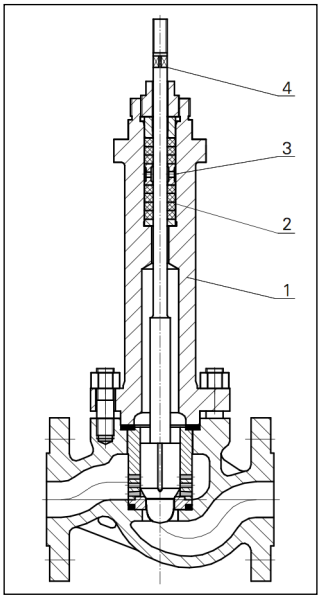

Extension Bonnet Type 1
1. Extension bonnet 2. Packing 3. Bushing 4. Stem

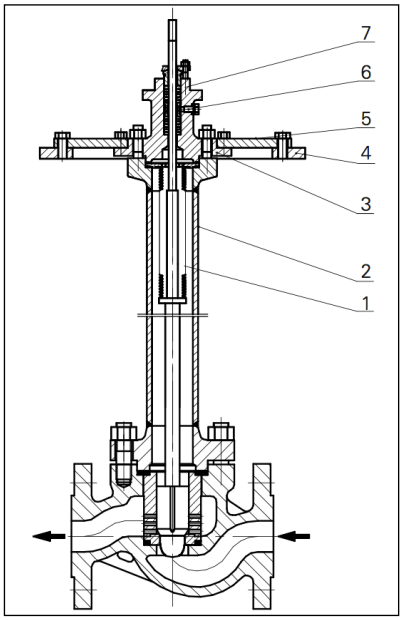

Extension Bonnet Type 2
1. Bellows 2. Extension bonnet 3. Cover bonnet 4. Top flange 5. Bolts 6. Inspection hole 7. Packing

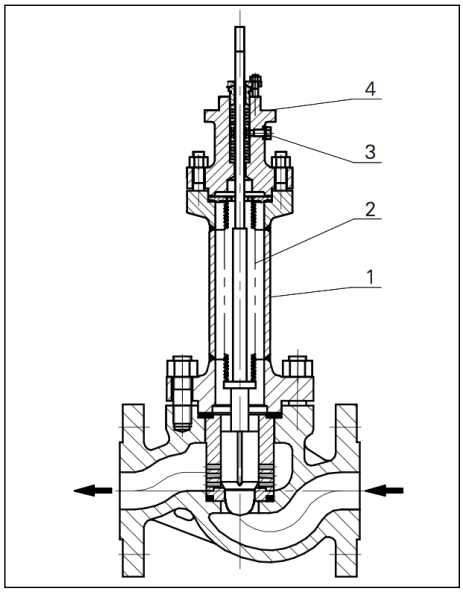

Bellows seal bonnets are used when no leakage(less than 1x10-6 cc/sec of helium) along the stem can be tolerated. They are often used when the process fluid is toxic, volatile, radioactive, or highly expensive. This special bonnet construction protects both the stem and the valve packing from contact with the process fluid.

Bellows Seal Bonnet
1. Extension bonnet 2. Bellows

Table 1. Rated Cv Value and Travel

Nominal Diameter DN(mm)	20	←→										
	25	←→										
Rated Cv Value		0.10	0.16	0.25	0.40	0.63	1.0	1.6	2.5	4.0	6.3	10
Linear		*	*	*	△	△	△	△	△	△	△	△
EQ%				*	△	△	△	△	△	△	△	△
Rated Travel L(mm)		10									16	

Note:

1) "" denotes production ranges.*

2) "△" denotes the curve of flow characteristics accord with GB/T4213.

Nominal Diameter DN(mm)	Port Size	Rated Kv Value		Travel (mm)
		EQ%	Linear	
32	15	4.0	4.4	16
	20	6.3	6.9	16
	25	10	11	16
	32	16	17.6	25
40	20	6.3	6.9	16
	25	10	11	16
	32	16	17.6	25
	40	25	27.5	25

Nominal Diameter DN(mm)	Port Size	Rated Kv Value		Travel (mm)
		EQ%	Linear	
50	25	10	11	16
	32	16	17.6	25
	40	25	27.5	25
	50	40	44	25
65	32	16	17.6	25
	40	25	27.5	25
	50	40	44	25
	65	63	69	40

Table 2. Flow characteristics

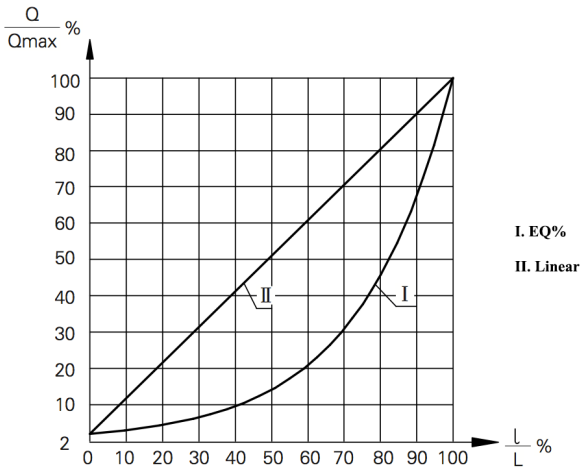

Q/Qmax \ I/L \ Characteristics	0	10	20	30	40	50	60	70	80	90	100
EQ%	2	11.8	21.6	31.4	41.2	51	60.8	70.6	80.4	90.2	100
Linear	2	3	4.37	6.5	9.6	14.1	20.9	30.9	45.7	67.6	100

R50 **Unit: %**

Allowable Differential Pressure

Air to Close(Direct action) Unit: Mpa

Actuator	Spring Range(Kpa)	Air Supply (Mpa)	Positioner Y/N	Seat Diameter dg (mm)									
				6	8	11	14	15	20	25	32	40	50
PZMA-4	20~100	0.14	No	10.0	5.92	3.15	1.94	1.69	0.95	0.61			
			Yes	10.0	10.0	9.2	5.68	4.95	2.55	1.63			
	40~200	0.25	Yes	—	—	10.0	7.3	6.3	3.34	4.17			
	80~240	0.40	Yes	—	—	—	10.0	10.0	6.52	4.17			
PZMA-5	20~100	0.14	No								0.49	0.32	0.20
			Yes								1.31	0.84	0.54
	40~200	0.25	Yes								1.72	1.10	0.71
	80~240	0.40	Yes								3.36	2.15	1.37

Air to Open(Reverse action) Unit: Mpa

Actuator	Spring Range(Kpa)	Air Supply (Mpa)	Positioner Y/N	Seat Diameter dg (mm)									
				6	8	11	14	15	20	25	32	40	50
PZMB-4	20~100	0.14	Yes/No	10.0	5.92	3.15	1.94	1.69	0.95	0.61			
	40~200	0.25	Yes	—	10.0	8.0	5.19	3.0	2.55	1.63			
	80~240	0.40	Yes	—	—	10.0	10.0	10.0	5.73	3.67			
PZMB-5	20~100	0.14	Yes/No								0.49	0.32	0.20
	40~200	0.25	Yes								1.31	0.84	0.54
	80~240	0.40	Yes								2.95	1.89	1.21

Additional Note:

a) Packing material is PTFE.

b) Leakage of Metal seat as Class IV.

c) The data is restricted by pressure-temperature sheet.

Figure 1. Valve Trim Material · Treatment

Figure1-1 Metal Seated

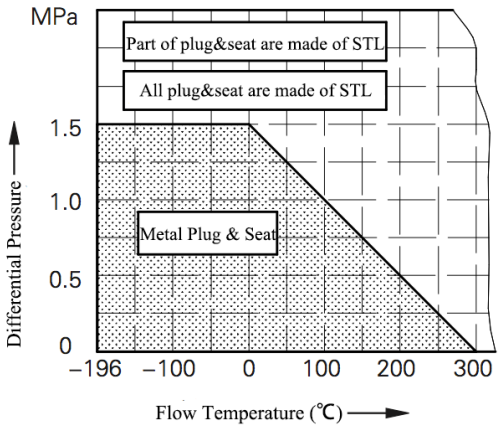

Figure 2. Working Temperature of Packing Material · Pressure Ranges

Figure 2-1 V-Type RPTFE

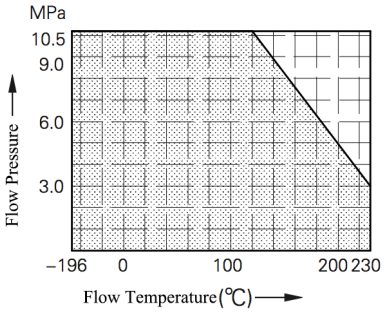

Figure 2-2 PTFE+Carbon Fiber/PTFE+Asbestos

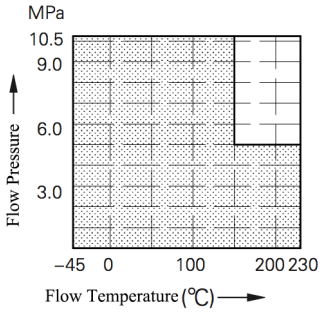

Figure 2-3 Flexible Graphite

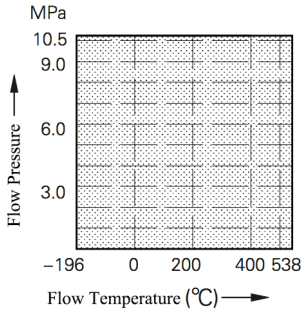

Working Temperature Range and Seat Leakage

Table 3-1 Valve Body Material: Carbon Steel

Valve Body Material		WCB, WCC, WC6, WC9, LCB		
Trim	Material	304/316	304/316	304/316
	Treatment	—	ST	SS
Seat	Material	304/316	304/316	304/316
	Treatment	—	ST	SS
Allowable Leakage	Class	IV	IV/V/VI	IV/V/VI
	Standard	GB/T4213, FCI70.2, ANSI B16.104		
Working Temperature(°C)	WCB, WCC	-5 ~ +230°C	-5 ~ +425°C	-5 ~ +425°C
	WC6, WC9	-5 ~ +230°C	-5 ~ +538°C	-5 ~ +538°C
	LCB	-45 ~ +230°C	-45 ~ +350°C	-45 ~ +350°C

Table 3-2 Valve Body Material: Stainless Steel

Valve Body Material		CF3, CF8, CF3M, CF8M		
Trim	Material	304/316	304/316	304/316
	Treatment	—	ST	ST
Seat	Material	304/316	304/316	304/316
	Treatment	—	ST	SS
Allowable Leakage	Class	IV	IV/V/VI	IV/V/VI
	Standard	GB/T4213, FCI70.2, ANSI B16.104		
Working Temperature(°C)		-196 ~ +538°C	-196 ~ +538°C	-196 ~ +538°C

External Dimensions for Standard, Bellows and Extension

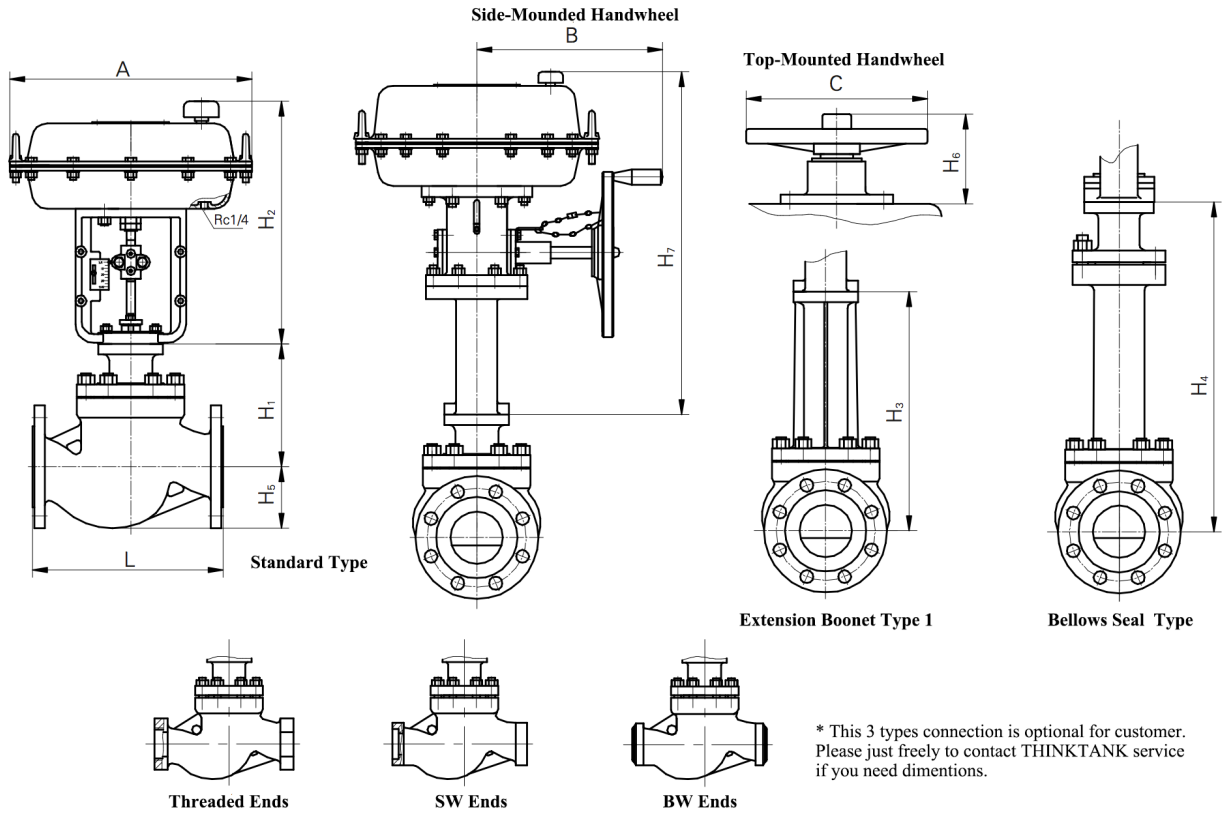

* This 3 types connection is optional for customer. Please just freely to contact THINKTANK service if you need dimentions.

Unit: mm

Nominal Diameter DN(mm)	L			H1	H3	H4	H5	Actuator					
	PN16/ 25/40, 150LB	PN64, 300LB	PN100, 600LB					A	C	H2	H6	H7	B
20(3/4”)	184	130	45	140	255	338	48	282	220	258	180	305	260
25(1”)	184	130	48	140	255	338	54	282	220	258	180	305	260
32(1-1/4”)	222	235	251	160	320	405	60	282	220	258	180	305	260
								308	220	280	180	305	260
40(1-1/2”)	222	235	251	160	320	405	68	282	220	258	180	305	260
								308	220	280	180	305	260
50(2”)	254	267	286	180	320	405	80	308	220	280	180	305	260
65(2-1/2”)	276	292	311	210	365	630	90	308	220	280	180	305	260

External Dimensions for Extension Type 2

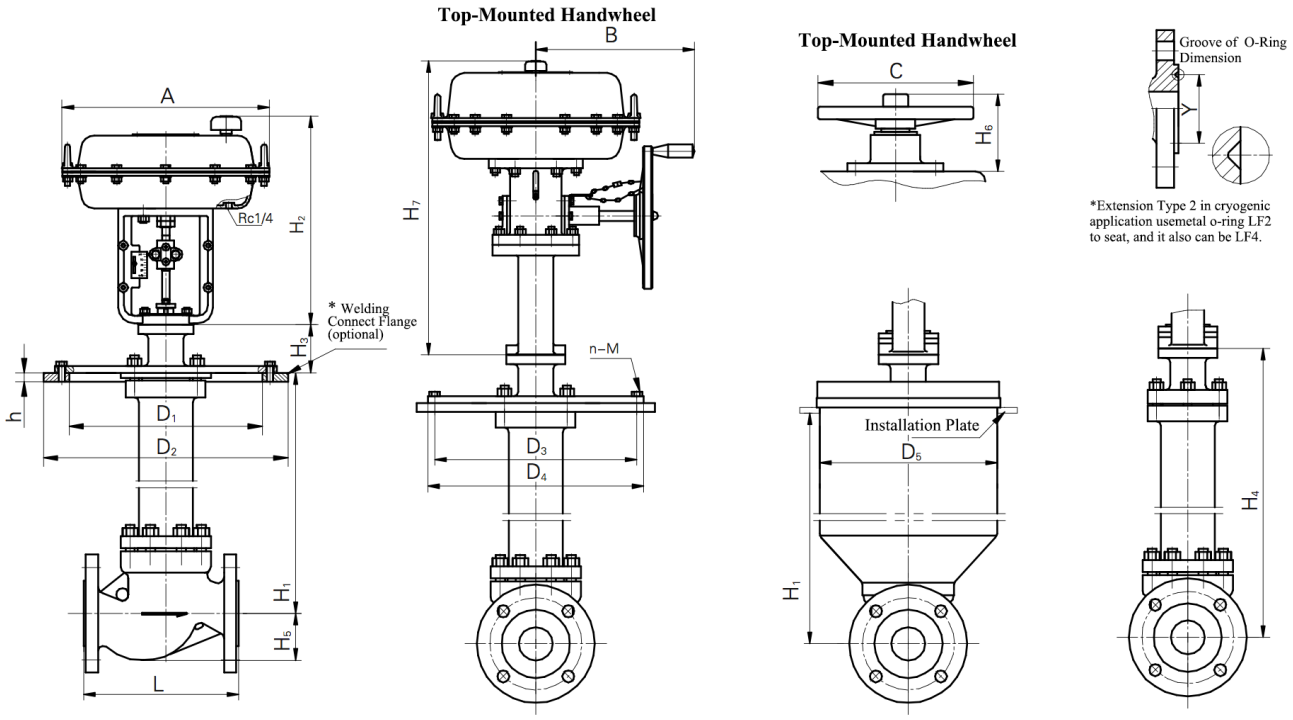

Top-Flange Connection Installation Type | Flating Sleeve Installation Type | Piping Installation Type

Unit: mm

Nominal Diameter DN(mm)	L			D1	D2	D3	D4	D5	Y	H1	H3	H4	H5	Actuator					
	PN 16/ 25/ 40, 150 LB	PN 64, 300 LB	PN100, 600LB											A	C	H2	H6	H7	B
20(3/4”)	184	130	45	230	310	260	290	285	45	700	88	588	42	282	220	258	180	305	260
25(1”)	184	130	48	230	310	260	290	285	45	700	88	588	48	282	220	258	180	305	260
32(1-1/4”)	222	235	251	250	335	285	315	285	60	700	88	588	56	282	220	258	180	305	260
														308	220	280	180	305	260
40(1-1/2”)	222	235	251	270	355	305	335	285	65	700	88	588	65	282	220	258	180	305	260
														308	220	280	180	305	260
50(2”)	254	267	286	305	390	340	370	285	75	700	88	588	76	308	220	280	180	305	260
65(2-1/2”)	276	292	311	430	520	460	490	470	90	700	95	695	90	308	220	280	180	305	260

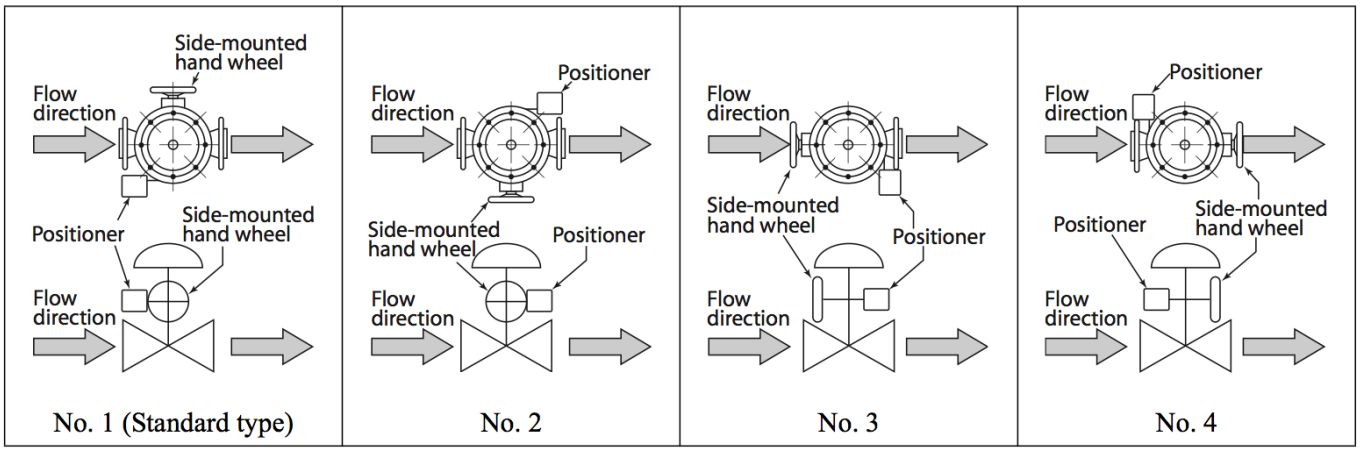

Actuator orientation

Note) Indicate by position number when installation other than the standard type is required.

Ordering Information

When ordering, please specify;

1) Model Number: HLC
2) Nominal size × Cv required
3) Type and rating of end connections
4) Body and trim material, necessity of hardening
5) Type of bonnet
6) Valve and plug characteristics
7) Type of actuator, necessity of hand wheel, and air to diaphragm
8) Valve action (direct or reverse)
9) Accessories (pressure regulator and etc.)
10) Special requirement of degreasing, copper free and etc.
11) Name of flow medium
12) Normal flow and maximum required flow
13) Pressure of flow medium, upstream and downstream pressure at maximum and minimum, required flow
14) Temperature and specific gravity of flow medium
15) Viscosity of flow medium, inclusive or exclusive of slurry

**Specifications are subject to change without notice.*

THINKTANK®

SHANGHAI THINKTANK PROCESS MANAGEMENT CO., LTD
Headquarters: #233 Renai Rd, Sanchong County, Taibei City, Taiwan.
Factory in China: Rd 1, Hongkuan Industrial Zone, Fuqing City, Fujian Province.
Office: #407 Rongxing Rd, Songjiang District, Shanghai City.
URL: https://www.valve-cn.com/