Empowering Safety，Ensuring Peace of Mind

Thermal Shutdown Valves For Fire Protection Systems

FUSIBLE LINK THERMAL SHUTDOWN SAFETY VALVES
AVAILABLE MATERIALS ARE CARBON STEE AND STAINLESS STEEL
WIDE RANGE SIZE 1/4” TO 10”

Company: Shanghai Thinktank Process Management Co., Ltd
Website: Https://cncontrolvalve.com/
WhatsApp: +86 185 1656 9221
Wechat: +86 199 2125 0077

Official Website

Fire Test Video

Hot Water Test Video

FUSIBLE LINK SAFETY VAVLES

Ensuring Safety and Reliability
in Every Environment

Designed for the most demanding environments, our emergency thermal shutdown valves are your first line of defense against unforeseen hazards.
To see more information please visit our official website.

THINKTANK

BROCHURE

THINKTANK is a leading manufacturer of fusible link safety valves, specializing in providing fire safety solutions for fuel generators, tank systems, fire protection systems and various industrial applications.

Our valves are designed to automatically shut off the flow of flammable or combustible liquids and gases in the event of a fire, preventing the spread of flames and minimizing potential damage.

Here are some of the key benefits of using THINKTANK's fusible link safety valves:

Automatic shut-off:
Automatically close in the event of a fire, preventing the spread of flames and minimizing potential damage.

Fast response times:
Respond quickly to temperature changes, ensuring timely shut-off and minimizing the risk of fire damage.

Wide temperature range:
Available in a variety of temperature ratings to suit different applications.

Reliable performance:
Built to withstand harsh industrial environments and provide reliable performance for years to come.

Easy installation and maintenance:
Designed for easy installation and maintenance, saving you time and money.

We are confident that THINKTANK's fusible link safety valves are the perfect solution for your fire safety needs.

FSV-T Series 1/4” to 2” Threaded Ends

FUSIBLE LINK SAFETY VAVLES
ARE API FIRE SAFE WITH FM & UL
APPROVED LINKS

MATERIAL LIST

* For Fire-Safe only

NO.	PART NAME	MATERIAL		QTY.
		STAINLESS STEEL	CARBON STEEL	
1	BODY	ASTM A351 Gr. CF8M	ASTM A216 WCB	1
2	CAP	ASTM A351 Gr. CF8M	ASTM A216 WCB	2
3	BALL	ASTM A351 Gr. CF8M	ASTM A351 Gr. CF8M	1
4	SEAT	PTFE	PTFE	2
5	BOLT	ASTM A193 Gr. B8	ASTM A193 Gr. B7	8
6	GASKET	*PTFE or GRAFOIL	* GRAFOIL	2
7	THRUST WASHER	*PTFE + 50% S.S.	* PTFE + 50% S.S.	1
8	STEM	ASTM A276 Gr. 316	ASTM A276 Gr. 316	1
9	O-RING	VITON	VITON	1
10	PACKING	*GRAFOIL	* GRAFOIL	1
11	RING	SS304	SS304	1
12	BELLEVEILLE WASHER	SS410	SS410	2
13	HANDLE NUT	SS304	SS304	2
14	STOP WASHER	SS304	SS304	2
15	STOPPER	SS304	SS304	1
16	LOCKING PLATE	SS304	SS304	1
17	HANDLE	SS304	SS304	1
18	HANDLE SLEEVE	VINYL GRIP	VINYL GRIP	1

Valve Features

- Nominal Pressure: 1000WOG
- Body Material: ASTM A351Gr.CF8M, ASTM A216Gr.WCB.
- Temperature Rating: -45.5°C(-50°F) to 246°C(475°F)
- Long Cycle Service Life
- Anti-Stem Blow-Out
- Anti-Static Device
- ISO 5211 PAD Direct Mount Automation
- Connection Ends: Threaded and Socket-Weld Ends.
- Test Standard: API 598

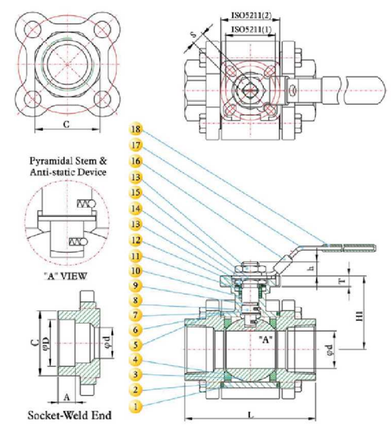

PRESSURE TEMPERATURE RATINGS (PTFE SEATS)

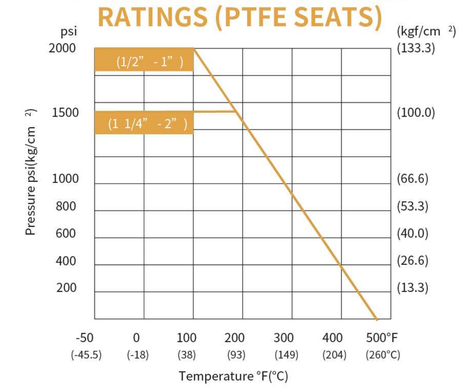

DIMENSIONS

SIZE		A		C		D		d		L		H1		h		S		T		ISO 5211	CV FACTOR	Weight	
Inch	mm	Inch	mm	Inch	mm	Inch	mm	Inch	mm	Inch	mm	Inch	mm	Inch	mm	Inch	mm	Inch	mm			Kg	Lb
1/2”	15	0.39	10	1.15	29.1	0.85	21.7	0.59	15.0	2.89	73.5	1.67	42.50	0.35	9.0	0.35	9	0.35	9	F03/F04	26	0.93	2.05
3/4 “	20	0.51	13	1.44	36.7	1.07	27.1	0.79	20.0	3.26	83.0	1.83	46.5	0.35	9.0	0.35	9	0.35	9	F03/F04	55	1.34	2.95
1”	25	0.51	13	1.81	46.0	1.33	33.8	1.00	25.4	3.90	99.0	2.34	59.5	0.45	11.5	0.43	11	0.35	9	F04/F05	110	2.18	4.80
1 ¼”	32	0.51	13	2.04	51.9	1.68	42.6	1.26	32.0	4.48	114.0	2.46	62.5	0.49	12.5	0.43	11	0.35	9	F04/F05	180	3.47	7.64
1 ½ “	40	0.51	13	2.33	59.3	1.92	48.7	1.57	40.0	5.03	128.0	3.11	79.0	0.63	16.0	0.55	14	0.51	13	F05/F07	270	4.73	10.42
2”	50	0.63	16	2.86	72.6	2.41	61.2	2.00	50.8	5.98	152.0	3.42	86.9	0.63	16.0	0.55	14	0.51	13	F05/F07	500	7.54	16.61

FSV-F Series 1/2 ” to 10” Flanged Ends

FUSIBLE LINK SAFETY VAVLES
ARE API FIRE SAFE WITH FM & UL
APPROVED LINKS

Valve Features

- Nominal Pressure: Class 150LB
- Body Material: ASTM A351Gr. CF8M, ASTM A216Gr.WCB.
- Temperature Rating: -45.5°C(-50°F) to 246°C(475°F)
- Long Cycle Service Life
- Anti-Stem Blow-Out
- Anti-Static Device
- ISO 5211 PAD Direct Mount Automation
- Connection Ends: Flanged Ends.
- Test Standard: API 598

MATERIAL LIST

NO.	PART NAME	MATERIAL		QTY.
		STAINLESS STEEL	CARBON STEEL	
1	BODY	ASTM A351 Gr. CF8M	ASTM A216 WCB	1
2	CAP	ASTM A351 Gr. CF8M	ASTM A216 WCB	1
3	BALL	ASTM A351 Gr. CF8M	ASTM A351 Gr. CF8M	1
4	STEM	ASTM A276 Gr. 316	ASTM A276 Gr. 316	1
5	SEAT	PTFE	PTFE	2
6	GASKET	GRAFOIL	GRAFOIL	1
7	THRUST WASHER	PTFE	PTFE	1
8	PACKING	GRAFOIL	GRAFOIL	1
9	GLAND	ASTM A351 Gr. CF8	ASTM A351 Gr. CF8	1
10	STOPPER	SS304	SS304	1
11	HANDLE NUT	SS304	SS304	2
12	GLAND BOLT	ASTM A193 Gr. B8	ASTM A193 Gr. B8	2
13	STUD BOLT	ASTM A193 Gr. B8	ASTM A193 Gr. B7M	4-10
14	SET NUT	ASTM A194 Gr. 8	ASTM A194 Gr. 2HM	4-10
15	HANDLE	SS304	SS304	1
16	LOCKING PLATE	SS304	SS304	1

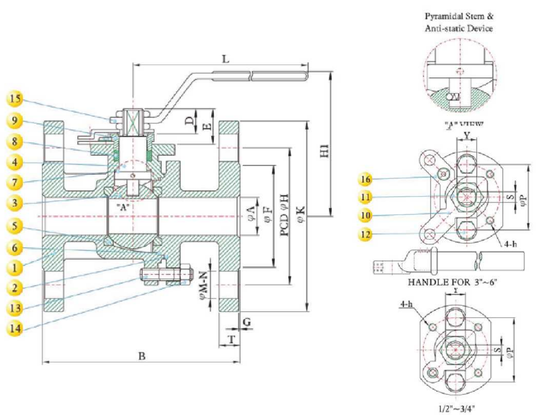

PRESSURE TEMPERATURE RATINGS (PTFE SEATS)

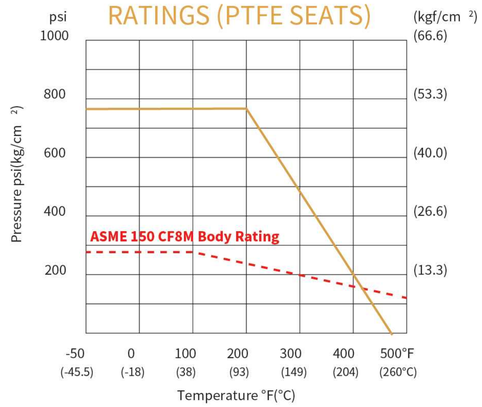

DIMENSIONS

SIZE		A		B		D		E		F		G		H		K		T		M		N	P		S		L		H1		h	Y	CV FACTOR	Weight	
Inch	mm	Inch	mm	Inch	mm	Inch	mm	Inch	mm	Inch	mm	Inch	mm	Inch	mm	Inch	mm	Inch	mm	Inch	mm		Inch	mm	Inch	mm	Inch	mm	Inch	mm				Kg	Lb
1/2”	15	0.59	15.0	4.25	107.9	0.56	14.1	0.98	25.0	1.38	35.0	0.06	1.6	2.38	60.4	3.50	88.9	0.44	11.1	0.62	15.7	4	1.65	42	0.32	8	5.18	131.5	2.91	73.8	M5*P0.8	M14*P2.0	26	1.81	3.99
3/4	“ 20	0.79	20.0	4.62	117.3	0.59	15.1	0.98	25.0	1.69	42.9	0.06	1.6	2.75	69.8	3.88	98.5	0.44	11.1	0.62	15.7	4	1.65	42	0.32	8	5.18	131.5	2.94	74.8	M5*P0.8	M14*P2.0	55	2.10	4.63
1”	25	0.98	25.0	5.00	127.0	0.62	15.8	1.24	31.5	2.00	50.8	0.06	1.6	3.12	79.2	4.25	107.9	0.44	11.1	0.62	15.7	4	1.97	50	0.39	10	6.42	163.0	3.44	87.4	M6*P1.0	M16*P2.0	110	3.00	6.61
1 ¼”	32	1.26	32.0	5.50	139.7	0.62	15.8	1.24	31.5	2.50	63.5	0.06	1.6	3.50	88.9	4.62	117.3	0.50	12.7	0.62	15.7	4	1.97	50	0.39	10	6.42	163.0	3.63	92.2	M6*P1.0	M16*P2.0	180	4.50	9.91
1 ½	“ 40	1.50	38.0	6.50	165.1	0.86	21.8	1.67	42.3	2.88	73.1	0.06	1.6	3.88	98.5	5.00	127.0	0.56	14.2	0.62	15.7	4	2.76	70	0.39	10	9.13	232.0	4.76	121.0	M8*P1.25	M16*P2.0	270	6.20	13.66
2”	50	1.97	50.0	7.00	177.8	0.86	21.8	1.67	42.3	3.62	91.9	0.06	1.6	4.75	120.6	6.00	152.4	0.62	15.7	0.75	19.0	4	2.76	70	0.39	10	9.13	232.0	5.08	129.0	M8*P1.25	M16*P2.0	500	9.00	19.82
2 1/2”	65	2.56	65.0	7.50	190.5	0.86	21.8	1.67	42.3	4.12	104.6	0.06	1.6	5.50	139.7	7.00	177.8	0.69	17.5	0.75	19.0	4	2.76	70	0.55	14	9.13	232.0	5.55	141.0	M8*P1.25	M22*P2.5	800	13.00	28.63
3”	80	3.15	80.0	8.00	203.2	1.10	28.0	2.21	56.3	5.00	127.0	0.06	1.6	6.00	152.4	7.50	190.5	0.75	19.0	0.75	19.0	4	4.02	102	0.55	14	12.87	327.0	6.52	165.7	M10*P1.5	M22*P2.5	1150	21.00	46.26
4”	100	3.94	100.0	9.00	228.6	1.10	28.0	2.21	56.3	6.19	157.2	0.06	1.6	7.50	190.5	9.00	228.6	0.94	23.8	0.75	19.0	8	4.02	102	0.55	14	12.87	327.0	7.11	180.7	M10*P1.5	M22*P2.5	2120	32.00	70.48
6”	150	5.91	150.0	15.50	393.7	1.48	37.7	2.65	67.3	8.50	215.9	0.06	1.6	9.50	241.3	11.00	279.4	1.00	25.4	0.88	22.3	8	4.92	125	0.79	20	42.20	1072.0	9.95	252.8	M12*P1.75	M30*P3.5	5100	75.00	165.20

THINKTANK® ALSO OFFERS:

- Breather Valves
- Flame Arrestors
- Pressure Relief Valve
- Safety Valves
- Blanketing Valves
- Self-Operated Pressure Regulators
- Pilot-Operated Pressure Regulators
- 2-Way Control Valves
- 3-Way Control Valves
- Knife Gate Valves
- High Performance Butterfly Valves
- Triple Offset Butterfly Valves

WHY CHOOSE THINKTANK® FUSIBLE LINK SAFETY VALVES?

- Safety is Our Top Priority
- Wide Range of Size and Material Options
- FM & UL Certified Links Offered for Temperatures Ranging from 165°F to 286°F
- ThinkTank Fusible Link Remains Operational in API Fire Safe Conditions (Manual Mode)
- Options for Threaded and Flanged End Connections
- Valve Engineered for Automatic Emergency Shutdown in Event of Fire

APPLICATION PICTURES

#407 Rongxing Road, Songjiang District, Shanghai, China

THINKTANK® FUSIBLE LINK FIRE SAFETY VALVES PROJECT REFERENCE LIST

No.	Country	Production Name	Specification	Year
1	Indonesia	Fusible Link Fire Safety Valves	Ball Valve Type, Stainless Steel, Size DN40-DN50	2020
2	Indonesia	Fusible Link Fire Safety Valves	Ball Valve Type, Stainless Steel, Size DN50	2020
3	Saudi Arabia	Fusible Link Fire Safety Valves	Ball Valve Type, Stainless Steel, Size DN50	2021
4	Australia	Fusible Link Fire Safety Valves	Ball Valve Type, Stainless Steel, Size DN25	2021
5	Malaysia	Fusible Link Fire Safety Valves	Ball Valve Type, Carbon Steel, Size DN80	2021
6	Mexico	Fusible Link Fire Safety Valves	Ball Valve Type, Stainless Steel, Size DN50	2022
7	Hong Kong, China	Fusible Link Fire Safety Valves	Ball Valve Type, Stainless Steel, Size DN40	2022
8	Indonesia	Fusible Link Fire Safety Valves	Ball Valve Type, Stainless Steel, Size DN25-DN80	2022
9	Indonesia	Fusible Link Fire Safety Valves	Ball Valve Type, Stainless Steel, Size DN25-DN80	2022
10	Indonesia	Fusible Link Fire Safety Valves	Ball Valve Type, Stainless Steel, Size DN25-DN80	2022
11	United Arab Emirates	Fusible Link Fire Safety Valves	Ball Valve Type, Stainless Steel, Size DN80-DN100	2022
12	Malaysia	Fusible Link Fire Safety Valves	Ball Valve Type, Carbon Steel, Size DN50	2022
13	Indonesia	Fusible Link Fire Safety Valves	Ball Valve Type, Carbon Steel, Size DN32-DN50	2023
14	Indonesia	Fusible Link Fire Safety Valves	Ball Valve Type, Carbon Steel, Size DN32-DN50	2023
15	Mauritius	Fusible Link Fire Safety Valves	Check Valve Type, Carbon Steel, Size DN150	2023
16	India	Fusible Link Fire Safety Valves	Ball Valve Type, Carbon Steel, Size DN40	2023

Fusible Link Safety Valve-Butterfly Type 2" to 8"

https://cncontrolvalve.com/

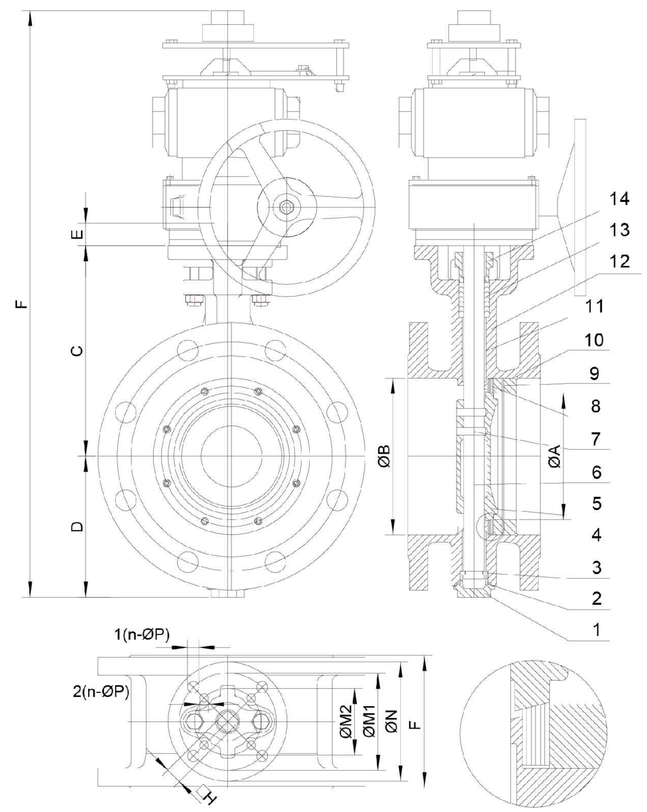

NO.	Name	Material
14	Packing Gland	Carbon Steel, Stainless Steel, Alloy Steel
13	Packing	Graphite
12	Body	Carbon Steel, Stainless Steel, Alloy Steel
11	Gear	Complex
10	Spring	Stainless Steel, Alloy Steel
9	Sealing	Carbon Steel, Stainless Steel, Alloy Steel
8	Seat	Alloy Steel+Graphite, Alloy
7	Pin	Stainless Steel, Alloy Steel
6	Stem	Stainless Steel, Alloy Steel
5	Disc	Stainless Steel, Alloy Steel
4	Gear	Complex
3	Ring	Stainless Steel, Alloy Steel
2	Sealing Ring	RPTFE, Graphite
1	Bottom	Carbon Steel,Stainless Steel, Alloy Steel

Flange Standard:
HG20592 PN10-25,
ANSI 16.5 150LB,
JIS 10K

Face to Face:
GB12221, API 609

DN	Inch	ØA	ØB	C	D	E	F	H	ØN	ØM1	1(n-Øp)
50	2"	47	60	133	82	16	108	11	90	70	4-Ø10
65	2.5"	64	78	148	96	16	112	11	90	70	4-Ø10
80	3"	71	90	158	103	16	114	11	90	70	4-Ø10
100	4"	91	113	180	118	20	127	14	92	70	4-Ø10
125	5"	111	137	199	133	20	140	14	95	70	4-Ø10
150	6"	133	159	223	148	23	140	17	125	102	4-Ø12
200	8"	179	210	260	182	25	152	19	125	102	4-Ø12

VEGETABLE OIL SCHEMATIC DIAGRAM DRAWING

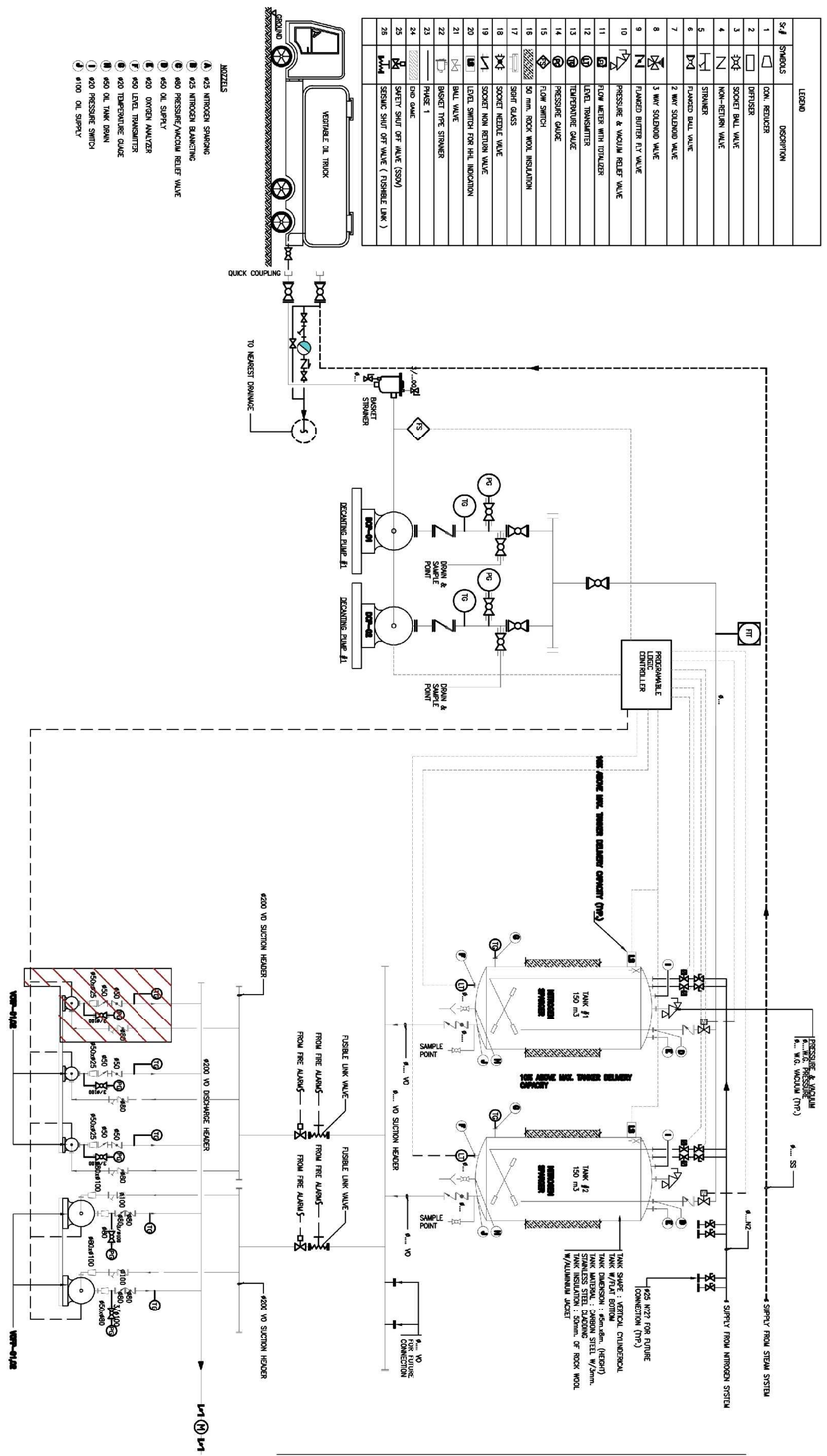

LNG SCHEMATIC DIAGRAM SYSTEM DRAWING

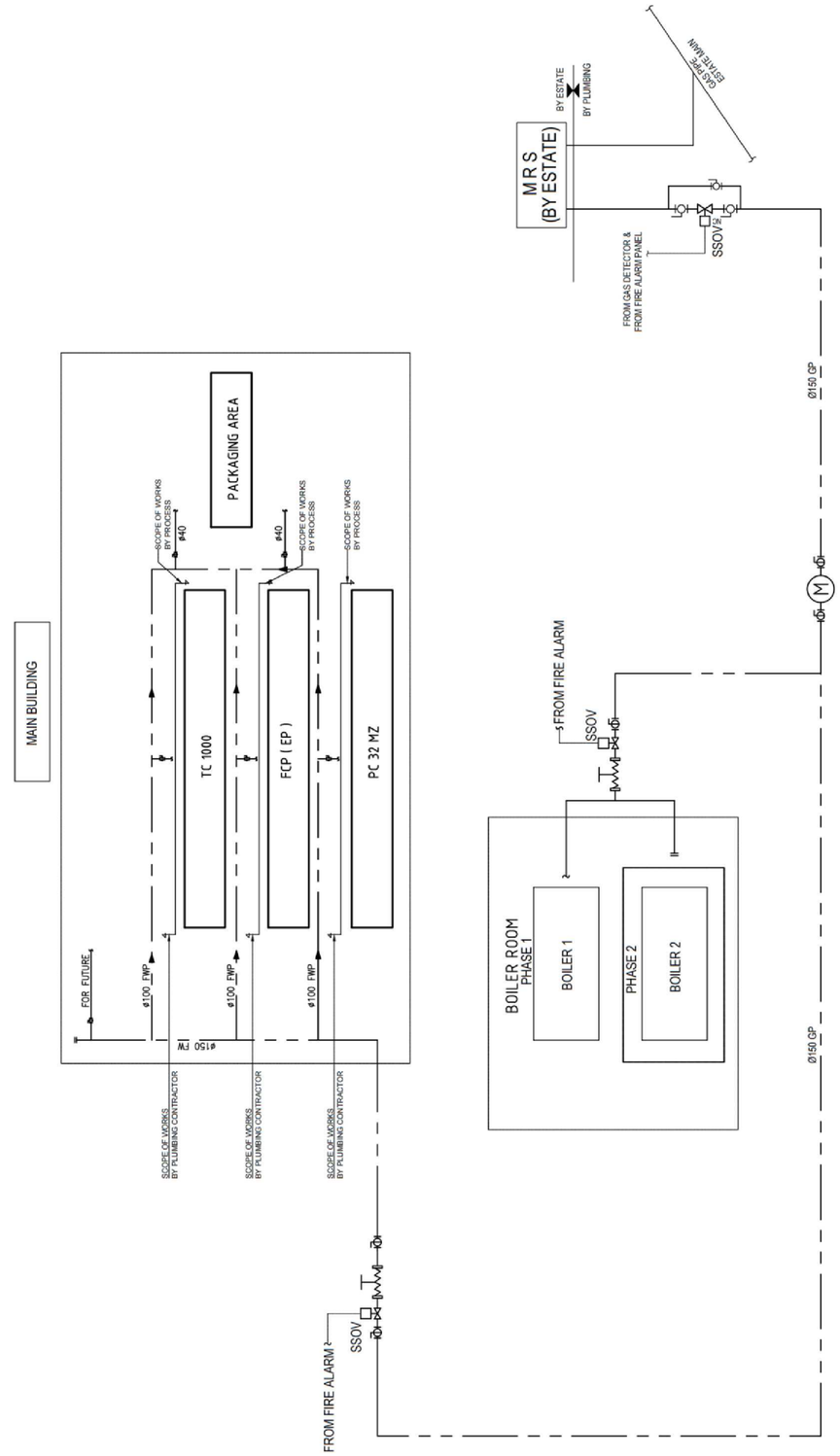

Certificate – Сертификат – 證明書 – Certificat – 증명서 – شهادة

FORM-QAL_1.3-R08, revision 00, effective since 30 March 2019 - 2020

Certificate of Compliance

No. OP200717.STPCD04

Certificate's Holder: SHANGHAI THINKTANK PROCESS MANAGEMENT CO., LTD.
8-407 Rongjing Rd, Songjiang District Shanghai City, China

Certification ECM Mark:

Product: Control Valve, Ball Valve, Butterfly Valve, Self-Operated Pressure Regulator, Gate Valve, Check Valve, Globe Valve

Model(s): (see the following annex)

Verification to: Standard:
Control valve: GB/T 4213-2008, ASME B16.34
Ball valve: GB/T 12237, API 6D, API 608, BS5351, DIN 3352
Butterfly valve: JB/T 8527, API609, ASME B16.34, MSS SP-67, MSS SP-68
Self-operated Pressure Regulator: JB/T 11089-2011, ASME B16.34
Gate valve: GB/T 12234, ASME B16.34, API 600, API 602, API 603, API 6D
Check Valve: GB/T 12220, ASME B16.34, API 6D, BS 1868, GB/T 12220, API 6D, API 594, API 602, BS 1868
Globe valve: GB/T 12240-2008, API 6D, API 602
Safety valve: GB/T 12243-2005, API 526, API 527
Related to CE Directive(s): (2014/68/EU) [Pressure Equipment] Annex II MODULE H

Remark: This document has been issued on a voluntary basis and upon request of the manufacturer. It is our opinion that the technical documentation reviewed, from the manufacturer, is satisfactory for the requirements of the ECM Certification Mark. The conformity mark above can be affixed on the products in accordance with the ECM regulations and Kiwa Nederland's rules.

Additional information: www.kiwa.com/ecm/certificates-check-the-validity

CE — the mark holder is responsible for the CE marking process, and if necessary, must refer to a notified body. This document has been issued on the basis of the regulation (EU) 2019/1020 and applicable for the certification of products. KLAS_15.04 rev.2 available at www.enteccertia.it

Issuance date: 17 July 2020

Expiry date: 16 July 2025

Kiwa Nederland Technical Expert Amanda Tijsen — Approver ECM Service Director Sonia Bellone

Ente Certificazione Macchine Srl
Via C.O. Bettio, 24/1 – Loc. Costalta - 8 Samarate – 48023 Ravenna (RA) Italy
☎ +39 0331 470514 ☎ +39 328 6705-36 ✉ info@enteccertia.it ✎ www.enteccertia.it

Certificate – Сертификат – 證明書 – Certificat – 증명서 – شهادة

SIL
Functional Safety Certificate

No. OP210511.STPD060

Certificate's Holder: SHANGHA THINKTANK PROCESS MANAGEMENT CO., LTD.
8-407 Rongjing Rd, Songjiang District, Shanghai City, China

Product: Pneumatic Electric Control Valves, Self-Operated Pressure Regulators

Model(s): DN15~DN100

Standard: IEC 61508-1:2010, IEC 61508-2:2010

Verification Mark: The Verification Mark can be affixed on the product. It MUST be permitted to alter the Verification Mark in any way.

Remark: This SIL Verification of Compliance Certificate is issued on a voluntary basis. TÜV confirms that a Test Report is valid for the listed type/ product(s) and found to meet the requirements of above standards. The Verification Mark may be affixed on the product. It MUST be permitted to alter the mark in any way. The mark must be properly embedded in a durable fashion and functional for use. For requirements to the Safety Manual. The Verification Mark may not be used as affixed on the product. It is NOT permitted to alter the Verification Mark in any way. In addition the Verification Mark is NOT allowed to transfer the Verification to third parties. The certificate can be checked for validity at www.enteccertia.it

Date of issue: 21 May 2021 — Service Manager Sonia Bellone

Expiry date: 19 May 2026 — Deputy Manager Amanda Tijsen

Ente Certificazione Macchine
Via C.O. Bettio, 24/1 - 48023 Ravenna (RA) Italy
☎ +39 0331 470514 ☎ +39 328 6705-36 ✉ info@enteccertia.it ✎ www.enteccertia.it

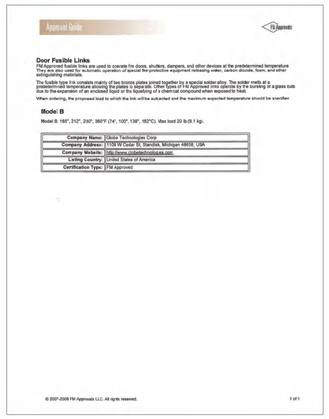

Approval Guide — Hartwell

Door Fusible Links

FM Approved fusible links are used to operate fire doors, shutters, dampers, and other devices at the predetermined temperature. They are also used for automatic operation of special fire-protective equipment releasing water, carbon dioxide, foam, and other extinguishing agents.

The fusible type link consists mainly of two brass plates joined together by a special solder alloy. The solder melts at a predetermined temperature allowing the plates to separate. Other types of FM Approved links operate by the bursting of a glass bulb due to the expansion of an enclosed liquid or the liquefying of a chemical compound when exposed to heat.

When ordering, the proposed load to which the link will be subjected and the maximum expected temperature should be specified.

Model: B

Model B: 100°, 212°, 230°, 360°F (74°, 100°, 138°, 182°C). Max load 20 lb (9.1 kg).

Company Name:	Globe Technologies Corp
Company Address:	1109 W Cedar St, Standish, Michigan 48658, USA
Company Website:	http://www.globetechnologies.com/
Listing Country:	United States of America
Certification Type:	FM Approved

© 2007-2008 FM Approvals LLC. All rights reserved. — 1 of 1

CREDIBILITY GRADING CERTIFICATE

CERTIFICATE NUMBER: PHZX2020071705-1

SHANGHAI THINKTANK PROCESS MANAGEMENT CO., LTD

According to the credit record, operation status, financial indicators and development prospect of the enterprise, combined with internal policies and current situation of national and local governments, according to the credit evaluation standard Q / PHZX 001-2018 the requirements of the terms of use, hereby issue

AAA

TERM OF VALIDITY: July 17, 2020 to July 16, 2025

Mutual Recognition Mark — Certificate Inquiry — Cross Holding Network

RATING AGENCIES: BEIJING PUHUA ZHONGXIN INTERNATIONAL CREDIT EVALUATION CO., LTD.
CHINA RATING WEBSITE PUBLICITY: www.cnrhc.org.cn
NATIONAL ENTERPRISE CREDIT PUBLIC SERVICE PLATFORM: www.credit.szcpa.com

Certificate of Management System Certification

This is to certify the quality management system of

SHANGHAI MYERS VALVE CO., LTD

上海迈尔阀门有限公司

REGISTRATION OF SYSTEM FOR QUALITY MANAGEMENT SYSTEM OF VALVE DIES MANUFACTURING, VALVE CASTING, VALVE PRODUCTION, VALVE SALES, VALVE INSTALLATION, ELECTRICAL DRIVE, WELDING SERVICE, PRESSURE PROVIDER

is in conformity with

CRT 19001:2016 / ISO 9001:2015

This certificate covers the following area

MANUFACTURING GENERAL VALVES, CONTROL VALVES AND SELF-OPERATED REGULATORS AND ITS ACCESSORIES.

Initial Certification Date: OCT.29.2021 — Issue Date: From OCT.29.2021

Validity Period: From OCT.29.2021 To OCT.28.2024

Certificate No.: 1.19192021SHRT3RS

legal representative: Wang Shuge

Beijing Dalubangxing Quality Certification Center Co., Ltd.
Address: No. 7B-12, Yuejiao road, Beijiao district Beijing P.R. China

CERTIFICATE OF COMPLIANCE

Certificate Number: 20130624-R14431
Report Reference: R14431
Issue Date: 2013-June-24

Issued to: GLOBE TECHNOLOGIES CORP.
1109 W Cedar St.
PO Box 1070
Standish, MI 48658

This is to certify that: Fusible Links
representative samples of:

Have been investigated by UL in accordance with the Standard(s) indicated on this Certificate.

Standard(s) for Safety: ANSI/UL 33, "Heat Responsive Links for Fire-Protection Service."

Additional Information: See the UL Online Certifications Directory at www.ul.com/database for additional information

Only those products bearing the UL Listing Mark should be considered as being covered by UL's Listing and Follow-Up Service.

The UL Listing Mark generally includes the following elements: the symbol UL in a circle, with the word "LISTED", a control number (may be alphanumeric) assigned by UL, and the product category name (product identifier) as indicated in the appropriate UL Directory.

Look for the UL Listing Mark on the product.
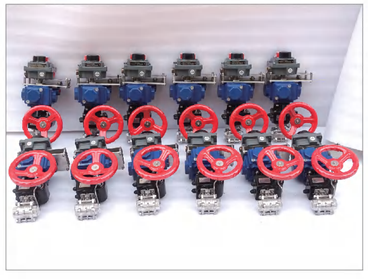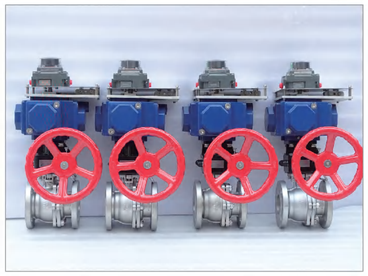
Page 1 of 2